CITY OF WHEAT RIDGE

JEFFERSON COUNTY, COLORADO

PROJECT # D-02-15
MISCELLANEOUS DRAINAGE IMPROVEMENTS PROJECT

SEPTEMBER, 2015

W. 48TH AVENUE (WEST SITE)

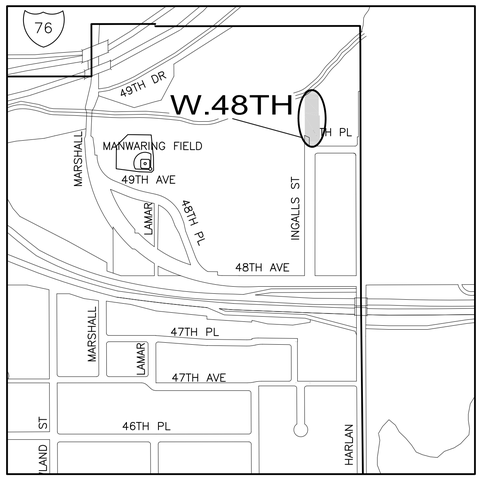

W. 47TH AVENUE (EAST SITE)

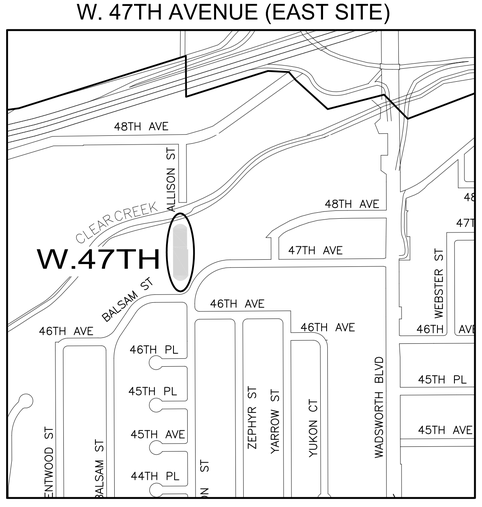

NORTH

SITE LOCATION MAPS

SCALE: 1" = 500'

INDEX	SHEET NO.
COVER SHEET	1
GENERAL NOTES & LEGEND	2
SUMMARY OF APPROXIMATE QUANTITIES	3
PROJECT DETAILS - USBR DETAILS	4
DEMO & RESTORATION PLAN - W 47TH (WEST SITE)	5
DEMO & RESTORATION PLAN - W 48TH (EAST SITE)	6
PLAN & PROFILE - W. 47TH AVENUE (WEST SITE)	7
PLAN & PROFILE - W. 48TH AVENUE (EAST SITE)	8

FIGURE NUMBER	STRUCTURAL BEST MANAGEMENT PRACTICES	PAGE NUMBER
GB-1	APPLICATIONS GRASS BUFFERS	S-6
GS-1	PROFILE & SECTIONS OF A GRASS SWALE	S-11
MBP-1	MODULAR BLOCK POROUS PAVEMENT CROSS-SECTION	S-17
MBP-1A	TYPICAL GRASS PAVE DETAIL	S-18
MBP-2	MODULAR BLOCK POROUS PAVEMENT	S-19
MBP-3	TYPICAL APPLICATIONS OF MODULAR BLOCK POROUS PAVEMENT	S-20
PPD-1	POROUS PAVEMENT DETENTION	S-24
PPD-2	WATER QUALITY CAPTURE VOLUME(WQCV), 80TH PERCENTILE RUNNOFF EVENT	S-25
PLD-1	POROUS LANDSCAPE DETENTION	S-32
PLD-2	WATER QUALITY CAPTURE VOLUME(WQCV), 80TH PERCENTILE RUNOFF EVENT	S-33
EDB-1	PLAN & SECTION OF AN EXTENDED DETENTION BASIN SEDIMENTATION FACILITY	S-41
EDB-2	WATER QUALITY CAPTURE VOLUME(WQCV), 80TH PERCENTILE RUNOFF EVENT	S-42
EDB-3	WATER QUALITY OUTLET SIZING: DR EXTENDED DETENTION BASIN WITH A 40-HR DRAIN TIME OF THE CAPTURE VOLUME	S-43
SFB-1	SAND FILTER BASIN	S-50
SFB-2	WATER QUALITY CAPTURE VOLUME(WQCV), 80TH PERCENTILE RUNOFF EVENT	S-51
CWB-1	PLAN & PROFILE OF A CONSTRUCTED WETLAND BASIN BASIN SEDIMENTATION FACILITY	S-58
CWB-2	WATER QUALITY CAPTURE VOLUME(WQCV), 80TH PERCENTILE RUNOFF EVENT	S-59
CWB-3	WATER QUALITY OUTLET SIZING: CONSTRUCTED WETLAND BASIN WITH A 24-HR DRAIN TIME OF THE CAPTURE VOLUME	S-60
RP-1	PLAN & SECTION OF A RETENTION POND SEDIMENTATION FACILITY	S-70
RP-2	WATER QUALITY CAPTURE VOLUME(WQCV), 80TH PERCENTILE RUNOFF EVENT	S-71
RP-3	WATER QUALITY OUTLET SIZING:WET EXTENDED DETENTION BASIN RETENTION POND WITH A 12-HR DRAIN TIME OF THE CAPTURE VOLUME	S-72
CWC-1	PLAN AND SECTION OF A CONSTRUCTED WETLAND CHANNEL	S-80

FIGURE NUMBER	TYPICAL STRUCTURAL BEST MANAGEMENT PRACTICES	PAGE NUMBER
1	TYPICAL WQCV OUTLET STRUCTURE PROFILE INCLUDING 100- YEAR DETENTION	2
2	TYPICAL WQCV OUTLET STRUCTURE PROFILES INCLUDING 2- TO 10- YEARS AND 100- YEAR DETENTION	3
2-A ALT	TYPICAL WQCV OUTLET STRUCTURE PROFILES INCLUDING 2- TO 10- YEAR AND 100- YEAR DETENTION	4
3	TYPICAL WQCV OUTLET STRUCTURE WING WALL CONFIGURATIONS	5
4	ORIFICE DETAILS FOR DRAINING WQCV	6
5	WQCV OUTLET ORIFICE PERFORATION SIZING	7
6	SUGGESTED WQCV OUTLET STANDARDIZED TRASH RACK DESIGN	8
6-A	SUGGESTED STANDARDIZED TRASH RACK & OUTLET DESIGN FOR WQCV OUTLETS WITH CIRCULAR OPENINGS	9
6A-1	STANDARDIZED WQCV OUTLET DESIGN USING 2" Ø CIRCULAR OPENING	10
6A-2	STANDARDIZED WQCV OUTLET DESIGN USING 2" Ø CIRCULAR OPENING	11
6-B	SUGGESTED STANDARDIZED TRASH RACK & OUTLET DESIGN FOR WQCV OUTLETS WITH RECTANGULAR OPENINGS	12
6B-1	STANDARDIZED WQCV OUTLET DESIGN USING 2" HEIGHT RECTANGULAR OPENINGS	13
6B-2	STANDARDIZED WQCV OUTLET DESIGN USING 2" HEIGHT RECTANGULAR OPENINGS	14
7	MINIMUM TRASH RACK OPENING AREA - EXTENDED RANGE	15

TABLE NUMBER	MAINTENANCE RECOMMENDATIONS	PAGE NUMBER
GB-1	IRRIGATED GRASS BUFFER STRIP MAINTENANCE CONSIDERATIONS	MR-1
GS-1	GRASS-LINED SWALE MAINTENANCE CONSIDERATIONS	MR-3
MBP-1	MODULAR BLOCK POROUS PAVEMENT MAINTENANCE CONSIDERATIONS	MR-4
PPD-1	POROUS PAVEMENT DETENTION MAINTENANCE CONSIDERATIONS	MR-5
PLD-1	POROUS LANDSCAPE DETENTION MAINTENANCE CONSIDERATIONS	MR-6
EDB-1	EXTENDED DETENTION BASIN MAINTENANCE CONSIDERATIONS	MR-7
SFB-1	SAND FILTER DETENTION BASIN MAINTENANCE CONSIDERATIONS	MR-9
CWB-1	CONSTRUCTED WETLANDS MAINTENANCE CONSIDERATIONS	MR-10
RP-1	RETENTION POND BASIN MAINTENANCE CONSIDERATION	MR-12
CWC-1	CONSTRUCTED WETLANDS MAINTENANCE CONSIDERATION	MR-14

C-16	BAFFLE LOCATIONS IN SEDIMENT BASINS	C-50
C-17	TEMPORARY CULVERT STREAM CROSSING	C-53
C-18	TYPICAL FORD STREAM CROSSING	C-54
C-19	TEMPORARY DIVERSION FACILITY SIZING NOMOGRAPH FOR DENVER REGION	C-56
C-20	OUTLET PROTECTION	C-60
C-21	CHECK DAM	C-61
C-22	INLET PROTECTION - STRAW BALES	C-63
C-23	INLET PROTECTION - FILTER FABRIC	C-64
C-24	CURB INLET GRAVEL FILTER	C-65
C-25	DROP INLET PROTECTION - BLOCK AND GRAVEL FILTER	C-66
C-26	INLET PROTECTION - EXCAVATED DROP INLET SEDIMENT TRAP	C-67
C-27	INLET PROTECTION - CURB SOCK	C-68
C-11	TEMPORARY SLOPE DRAIN	C-40
C-11A	TEMPORARY SLOPE DRAIN APPLICATION	C-41
C-12	STRAW BALE BARRIERS	C-43
C-12A	STRAW BALE BARRIERS INSTALLATION	C-44
C-13	SILT FENCE EROSION BARRIER	C-45
C-14	RESIDENTIAL EROSION CONTROL BARRIERS	C-46
C-15	TEMPORARY SEDIMENT BASIN	C-48
C-15A	TEMPORARY SEDIMENT BASIN OUTLET DETAIL	C-49

TABLE NUMBER	INDUSTRIAL & COMMERCIAL BEST MANAGEMETN PRACTICES	PAGE NUMBER
IC-1	SUGGESTED STRUCTURAL CONTROLS	IC-12
IC-2	SUMMARY OF NONSTRUCTURAL BMP'S	IC-13

TABLE NUMBER	NONSTRUCTURAL BEST MANAGEMETN PRACTICES	PAGE NUMBER
NS-1	ADVANTAGES & DISADVANAGES OF BMP'S FOR SPILL PREVENTION & RESPONSE BMP'S	NS-31

TABLES/ FIGURES NUMBER	CONSTRUCTION BEST MANAGEMENT PRACTICES	PAGE NUMBER
C-1	MAXIMUM TIME LIMITS OF LAND EXPOSURE FOR SELECTION OF EROSION CONTROL	C-20
C-2	MINIMUM DRILL SEEDING RATES FOR ANNUAL GRASSES	C-28
C-3	MINIMUM DRILL SEEDING RATES FOR PERENNIAL GRASSES-ALKALI SOIL SEED MIX	C-29
C-4	SEEDING DATES FOR ANNUAL AND PERENNIAL GRASSES	C-31
C-5	SEDIMENT ENTRAPMENT FACILITY LIMITATIONS	C-42
C-6	LINING MATERIALS FOR TEMPORARY CHANNELS	C-57
C-7	TEMPORARY CHANNEL DESIGN CRITERIA	C-58
C-1	MAP SYMBOLS (SHEET 1 OF 2)	C-3
C-1A	MAP SYMBOLS (SHEET 2 OF 2)	C-4
C-2	OBLIQUE VIEW OF EXAMPLE CONSTRUCTION SITE	C-18
C-3	SITE PLAN MAP FOR EXAMPLE CONSTRUCTION SITE	C-19
C-4	SURFACE ROUGHENING	C-22
C-5	MULCHING	C-23
C-6	ORIENTATION OF BLANKETS, NETTING AND MATTING	C-25
C-7	INSTALLATION OF BLANKETS, NETTING AND MATTING	C-26
C-8	TEMPORARY VEHICLE TRACKING CONTROL	C-34
C-8A	TEMPORARY VEHICLE TRACKING CONTROL WITH WASH RACK	C-35
C-9	TEMPORARY DIVERSION DIKE	C-37
C-10	ROUGH-CUT STREET CONTROL	C-39
C-11	TEMPORARY SLOPE DRAIN	C-40
C-11A	TEMPORARY SLOPE DRAIN APPLICATION	C-41
C-12	STRAW BALE BARRIERS	C-43
C-12A	STRAW BALE BARRIERS INSTALLATION	C-44
C-13	SILT FENCE EROSION BARRIER	C-45
C-14	RESIDENTIAL EROSION CONTROL BARRIERS	C-46
C-15	TEMPORARY SEDIMENT BASIN	C-48
C-15A	TEMPORARY SEDIMENT BASIN OUTLET DETAIL	C-49

CDOT STANDARD DETAILS LIST

PLAN NUMBER	M STANDARD TITLE	PAGE NUMBER
M-100-1	STANDARD SYMBOLS (3 SHEETS)	1-3
M-100-2	ACRONYMS AND ABBREVIATIONS (4 SHEETS)	4-7
M-203-1	APPROACH ROADS (REVISED 7-8-13)	8
M-203-2	DITCH TYPES	9
M-203-11	SUPERELEVATION CROWNED & DIVIDED HIGHWAYS (3 SHEETS)	10-12
M-203-12	SUPERELEVATION STREETS (2 SHEETS)	13-14
M-206-1	EXCAVATION AND BACKFILL FOR STRUCTURES (2 SHEETS)	15-16
M-206-2	EXCAVATION AND BACKFILL FOR BRIDGES (2 SHEETS)	17-18
■ M-208-1	TEMPORARY EROSION CONTROL (12 SHEETS)	19-30
■ M-210-1	MAILBOX SUPPORTS (2 SHEETS)	31-32
■ M-214-1	PLANTING DETAILS	33
■ M-412-1	CONCRETE PAVEMENT JOINTS (5 SHEETS)(REVISED 7-24-12)	~~34-38~~
M-510-1	STRUCTURAL PLATE PIPE H-20 LOADING	39
M-601-1	SINGLE CONCRETE BOX CULVERT (2 SHEETS)(REVISED 8-27-13)	~~40-41~~
M-601-2	DOUBLE CONCRETE BOX CULVERT (2 SHEETS)(REVISED 8-27-13)	~~42-43~~
M-601-3	TRIPLE CONCRETE BOX CULVERT (2 SHEETS)(REVISED 8-27-13)	~~44-45~~
M-601-10	HEADWALL FOR PIPES	46
M-601-11	TYPE "S" SADDLE HEADWALLS FOR PIPE	47
M-601-12	HEADWALLS AND PIPE OUTLET PAVING	48
M-601-20	WINGWALLS FOR PIPE OR BOX CULVERTS	49
M-603-1	METAL PIPE (4 SHEETS)	50-53
■ M-603-2	REINFORCED CONCRETE PIPE	54
M-603-3	PRECAST CONCRETE BOX CULVERT	55
M-603-4	CORRUGATED POLYETHYLENE PIPE (AASHTO M294)(REVISED 10-2-14)	56
■ M-603-5	POLYVINYL CHLORIDE (PVC) PIPE (AASHTO M304)(REVISED 10-2-14)	57
■ M-603-10	CONCRETE AND METAL END SECTIONS (2 SHEETS)	58-59
M-604-10	INLET, TYPE C	60
M-604-11	INLET, TYPE D	61
■ M-604-12	CURB INLET TYPE R (2 SHEETS)	62-63
M-604-13	CONCRETE INLET TYPE 13	64
■ M-604-20	MANHOLES (3 SHEETS)	65-67
M-604-25	VANE GRATE INLET (5 SHEETS)	68-72
M-605-1	SUBSURFACE DRAINS	73
M-606-1	GUARDRAIL TYPE 3 W-BEAM (19 SHEETS)(REVISED 10-27-14)	~~74-92~~
M-606-13	GUARDRAIL TYPE 7 F-SHAPE BARRIER (4 SHEETS)(REVISED 8-30-13)	~~93-96~~
M-606-14	PRECAST TYPE 7 CONCRETE BARRIER (3 SHEETS)	97-99
M-607-1	WIRE FENCES AND GATES (3 SHEETS)	100-102
M-607-2	CHAIN LINK FENCE (3 SHEETS)	103-105
M-607-3	BARRIER FENCE	106
M-607-4	DEER FENCE AND GATES (3 SHEETS)	107-109
M-607-10	PICKET SNOW FENCE	110
M-607-15	ROAD CLOSURE GATE (9 SHEETS)	111-119
■ M-608-1	CURB RAMPS (7 SHEETS)(REVISED 6-16-14)	~~120-125~~
■ M-609-1	CURBS, GUTTERS, AND SIDEWALKS (4 SHEETS)(REVISED 7-24-12)	~~126-129~~
M-611-1	CATTLE GUARD (2 SHEETS)	130-131
M-613-1	ROADWAY LIGHTING (4 SHEETS)	132-135
M-614-1	RUMBLE STRIPS (3 SHEETS)	136-138
M-614-2	SAND BARREL ARRAYS (2 SHEETS)	139-140
M-615-1	EMBANKMENT PROTECTOR TYPE 3	141
M-615-2	EMBANKMENT PROTECTOR TYPE 5	142
M-616-1	INVERTED SIPHON	143
M-620-1	FIELD LABORATORY CLASS 1	144
M-620-2	FIELD LABORATORY CLASS 2 (2 SHEETS)	145-146
M-620-11	FIELD OFFICE CLASS 1	147
M-620-12	FIELD OFFICE CLASS 2	148
M-629-1	SURVEY MONUMENTS (2 SHEETS)	149-150

PLAN NUMBER	S STANDARD TITLE	PAGE NUMBE
S-612-1	DELINEATOR INSTALLATIONS (7 SHEETS)	151
■ S-614-1	GROUND SIGN PLACEMENT (2 SHEETS)(REVISED 3-7-14)	~~158~~
S-614-2	CLASS I SIGNS	
S-614-3	CLASS II SIGNS	
S-614-4	CLASS III SIGNS (3 SHEETS)	162
S-614-5	BREAK-AWAY SIGN SUPPORT DETAILS FOR GROUND SIGNS (2 SHEETS)	165
S-614-6	CONCRETE FOOTINGS AND SIGN ISLANDS FOR CLASS III SIGNS (2 SHEETS)(REVISED 9-16-13)	~~169~~
■ S-614-8	TUBULAR STEEL SIGN SUPPORT DETAILS (5 SHEETS) (REVISED 10-23-14)	~~169~~
S-614-9	PEDESTRIAN PUSH BUTTON POST ASSEMBLY	
S-614-10	MARKER ASSEMBLY INSTALLATIONS	
S-614-11	MILE POST SIGN DETAIL FOR HIGH SNOW AREAS	
S-614-12	STRUCTURE NUMBER INSTALLATION	
S-614-14	FLASHING BEACON AND SIGN INSTALLATION (3 SHEETS)	178
S-614-20	TYPICAL POLE MOUNT SIGN INSTALLATIONS	
S-614-21	CONCRETE BARRIER SIGN POST INSTALLATIONS	
S-614-22	TYPICAL MULTI-SIGN INSTALLATIONS	
S-614-40	TYPICAL TRAFFIC SIGNAL INSTALLATION DETAILS (5 SHEETS)	184
S-614-40A	ALTERNATIVE TRAFFIC SIGNAL INSTALLATION DETAILS (4 SHEETS) (REVISED 9-25-12)	~~189~~
S-614-41	TEMPORARY SPAN WIRE DETAILS (REVISED 11-18-14)	
S-614-42	CABINET FOUNDATION DETAIL (4 SHEETS)	194
S-614-43	TRAFFIC LOOP AND MISCELLANEOUS SIGNAL DETAIL 10 SHEETS)	198-
S-614-44	PEDESTAL POLE SIGNALS (2 SHEETS) (REVISED 11-3-14)	
S-614-50	STATIC SIGN MONOTUBE STRUCTURES (12 SHEETS) (REVISED 11-28-12)	208
S-614-60	DYNAMIC SIGN MONOTUBE STRUCTURES (14 SHEETS) (REVISED 11-28-12)	220
■ S-627-1	PAVEMENT MARKINGS (5 SHEETS)(REVISED 6-10-14)	~~234~~
■ S-630-1	TRAFFIC CONTROLS FOR HIGHWAY CONSTRUCTION (20 SHEETS)(REVISED 12-8-14)	~~239~~
S-630-2	BARRICADES, DRUMS, CONCRETE BARRIERS (TEMP) AND VERTICAL PANELS	
S-630-3	FLASHING BEACON (PORTABLE) DETAILS	
S-630-4	STEEL SIGN SUPPORT (TEMP) INSTALLATION DETAILS (2 SHEETS)	261
S-630-5	PORTABLE RUMBLE STRIPS (TEMPORARY) (2 SHEETS) (REVISED 7-26-13)	~~263~~
S-630-6	EMERGENCY PULL-OFF AREA (TEMPORARY)	
S-630-7	ROLLING ROADBLOCKS FOR TRAFFIC CONTROL (3 SHEETS)	

NEW OR REVISED STANDARD PLAN SHEETS APPLICABLE TO THIS PROJECT, INDICATED BY A MARKED BOX ■, WILL BE ATTACHED TO THE PLANS.

ALL OF THE M&S STANDARD PLANS, AS SUPPLEMENTED AND REVISED, APPLY TO THIS PROJECT WHEN USED BY DESIGNATED PAY ITEM OR SUBSIDIARY ITEM.

COLORADO
DEPARTMENT OF TRANSPORTATION
STANDARD PLANS LIST
M & S STANDARDS
JULY 4, 2012
REVISED ON DECEMBER 8, 2014

NO.	REVISIONS	DATE	INIT.

DRAWN BY ____ ____
DESIGN BY ____ ____
CHK'D BY ____ ____
APPROVED ____ ____

SCALES
HORIZ. 1" = 30'
VERT.

CALL UTILITY NOTIFICATION CENTER OF COLORADO
1-800-922-1987
CALL 2-BUSINESS DAYS IN ADVANCE BEFORE YOU DIG, GRADE OR EXCAVATE FOR THE MARKING OF UNDERGROUND MEMBER UTILITIES

City of Wheat Ridge
DEPARTMENT OF PUBLIC WORKS
7500 WEST 29TH AVENUE
WHEAT RIDGE, COLORADO 80033
TELEPHONE: (303) 235-2861
FAX: (303) 235-2857

D-02-15
DRAINAGE IMPROVEMENT PROJECTS

CDOT STANDARDS PLAN LIST AND SUMMARY OF APPROX QUANTITIES

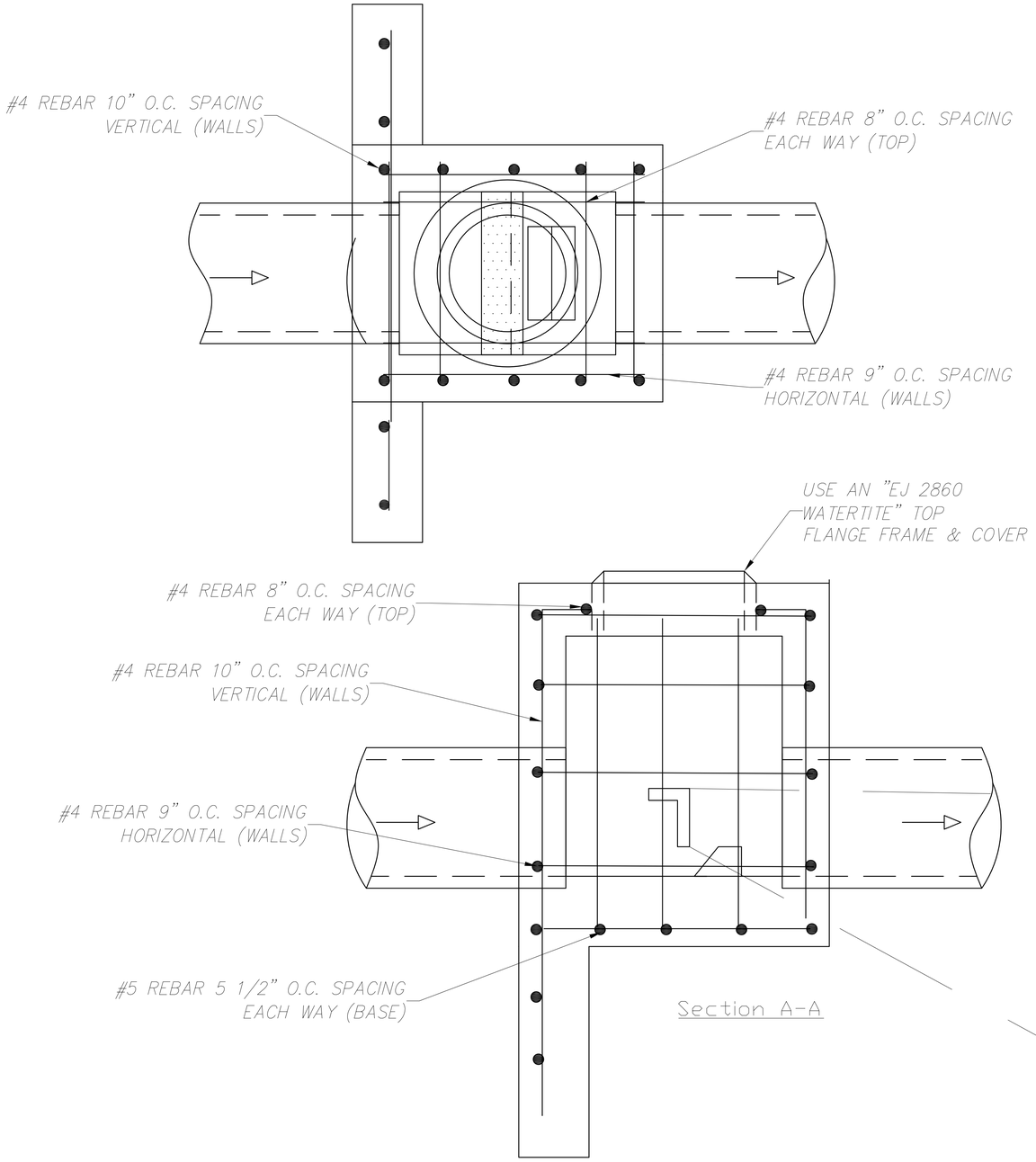

USBR REINFORCING DETAIL

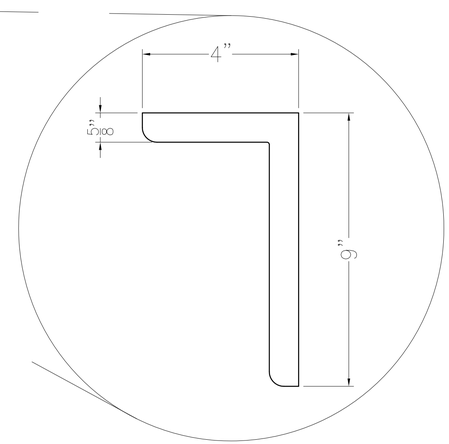

L9 X4 X 5/8 ANGLE IRON
in accordance with
AISC guidelines

PROJECT D-02-15 SUMMARY OF APPROXIMATE QUANTITIES

			WEST SITE - W 47TH		EAST SITE - W 48TH		TOTALS	
SPEC. #	DESCRIPTION	UNIT	PLAN	AS BUILT	PLAN	AS BUILT	PLAN	AS BUILT
201	CLEARING AND GRUBBING	LS	1		1		2	
202A	REMOVAL OF OBSTRUCTIONS AND STRUCTURES	LS	1		1		2	
202B	REMOVAL OF LANDSCAPE AREAS	SY	40		20		60	
202C	REMOVAL OF PIPE	LF	67		104		171	
202D	CLEAN CULVERT	EA	1		1		2	
203A	MUCK EXCAVATION	CY	40		40		80	
203B	EARTHWORK - ROUGH GRADE	SY	400		400		800	
208	EROSION CONTROL (INCL. ALL EROSION CONTROL FEATURES)	LS	1		1		2	
210A	RESET FENCE (WOOD)	LF	40		24		64	
211	LANDSCAPE RESTORATION	LS	1		1		2	
212A	SEEDING (NATIVE)	SY	400		400		800	
212B	SOIL PREPARATION	SY	400		400		800	
216	SOIL RETENTION BLANKET	SY	400		400		800	
603A	18" HDPE	LF	110				110	
603B	24" HDPE	LF			65		65	
603C	CONCRETE HEADWALL (PIPE RETAINER)	EA	2		2		4	
604A	MODIFIED USBR TYPE VI	EA	1		1		2	
604B	JUNCTION BOX WITH HEADWALL	EA	1				1	
604C	CONNECT TO EXISTING PIPE	EA	1		1		2	
604D	CONNECT TO EXISTING MANHOLE	EA			2		2	
620	SANITARY FACILITY	EA	1		1		2	
625	CONST. SURVEYING/STAKING (INCLUDES AS BUILT DWG)	LS	1		1		2	
626	MOBILIZATION	LS	1		1		2	
630	TRAFFIC CONTROL	LS	1				1	
720	MATERIALS SAMPLING TESTING	LS	1		1		1	

NO.	REVISIONS	DATE	INIT.

DRAWN BY
DESIGN BY
CHK'D BY
APPROVED

SCALES
HORIZ. 1" = 30'
VERT.

CALL UTILITY NOTIFICATION CENTER OF COLORADO
1-800-922-1987
CALL 2-BUSINESS DAYS IN ADVANCE BEFORE YOU DIG, GRADE OR EXCAVATE FOR THE MARKING OF UNDERGROUND MEMBER UTILITIES

City of Wheat Ridge
DEPARTMENT OF PUBLIC WORKS
7500 WEST 29TH AVENUE
WHEAT RIDGE, COLORADO 80033
TELEPHONE: (303) 235-2861
FAX: (303) 235-2857

D-02-15
DRAINAGE IMPROVEMENT
PROJECTS

SUMMARY OF APPROXIMATE QUANTITIES
AND
PROJECT DETAILS

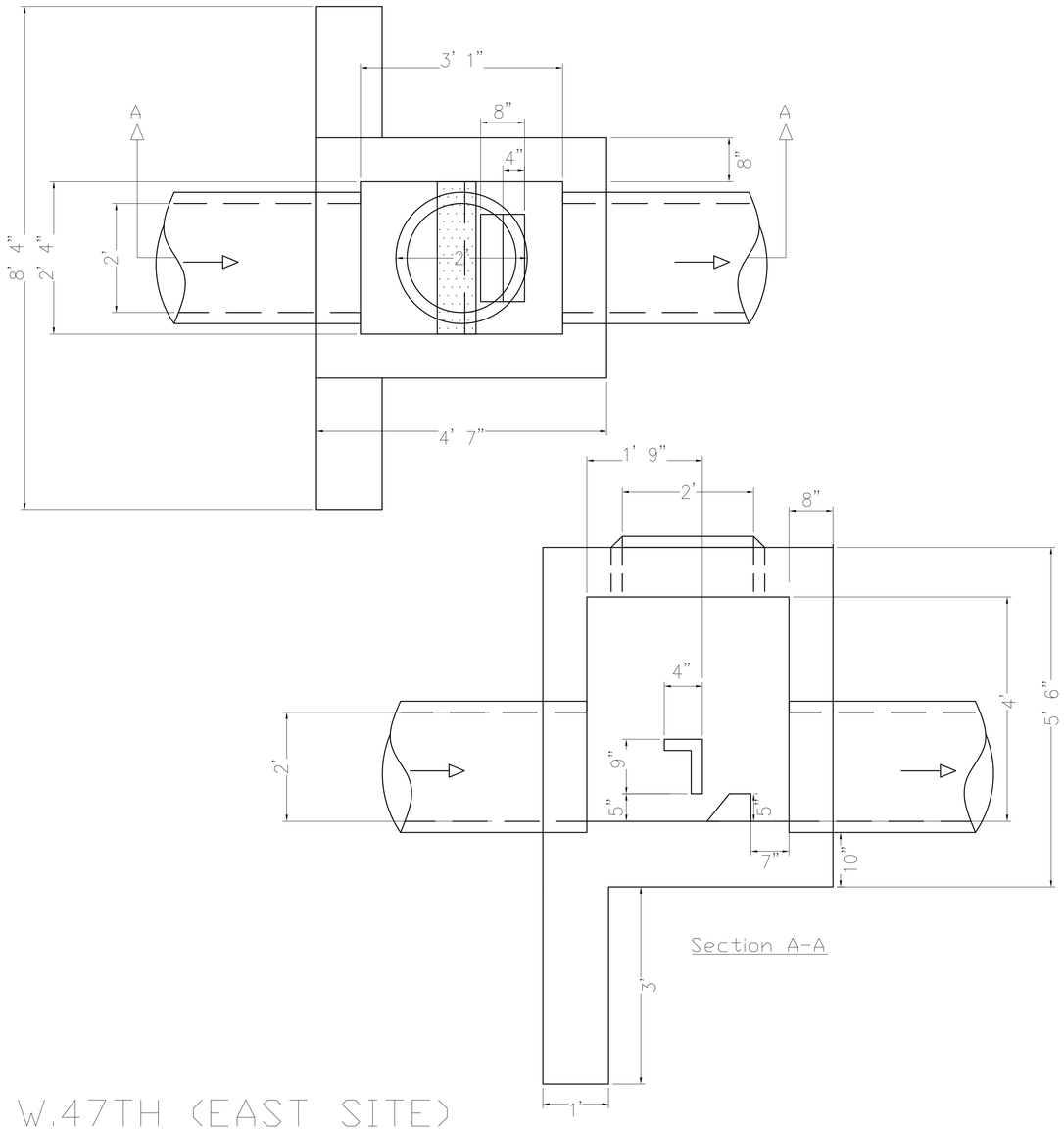

W.47TH (EAST SITE)

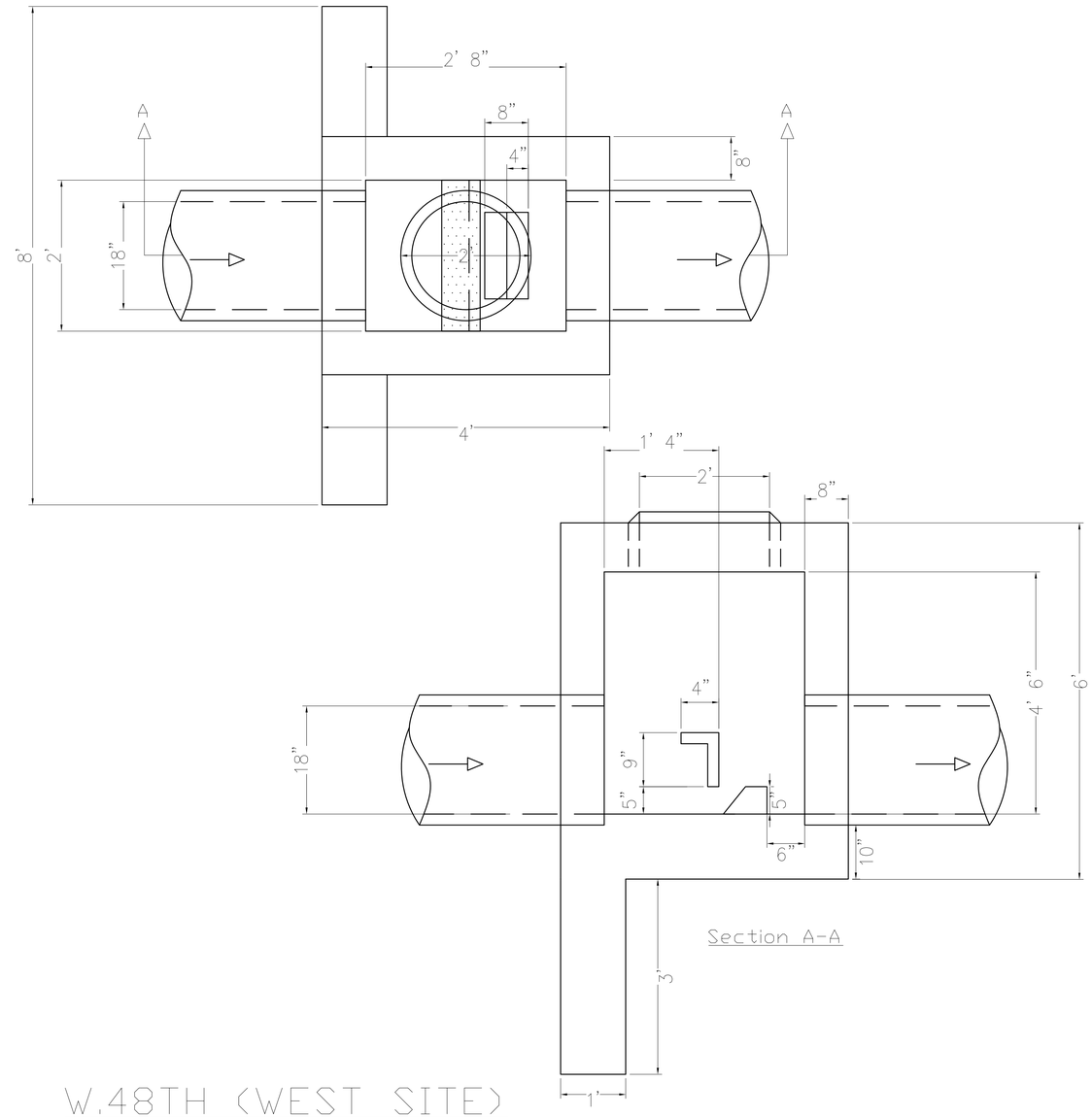

W.48TH (WEST SITE)

*** REVIEW SHEET #3 FOR REINFORCING DETAIL ***

NO.	REVISIONS	DATE	INIT.

DRAWN BY _____

DESIGN BY _____

CHK'D BY _____

APPROVED _____

SCALES
HORIZ. 1" = 30'
VERT.

CALL UTILITY NOTIFICATION CENTER OF COLORADO
1-800-922-1987
CALL 2-BUSINESS DAYS IN ADVANCE BEFORE YOU DIG, GRADE OR EXCAVATE FOR THE MARKING OF UNDERGROUND MEMBER UTILITIES

City of Wheat Ridge
DEPARTMENT OF PUBLIC WORKS

7500 WEST 29TH AVENUE
WHEAT RIDGE, COLORADO 80033

TELEPHONE: (303) 235-2861
FAX: (303) 235-2857

D-02-15
DRAINAGE IMPROVEMENT PROJECTS

PROJECT DETAILS

SHEET 4
SHEETS 8

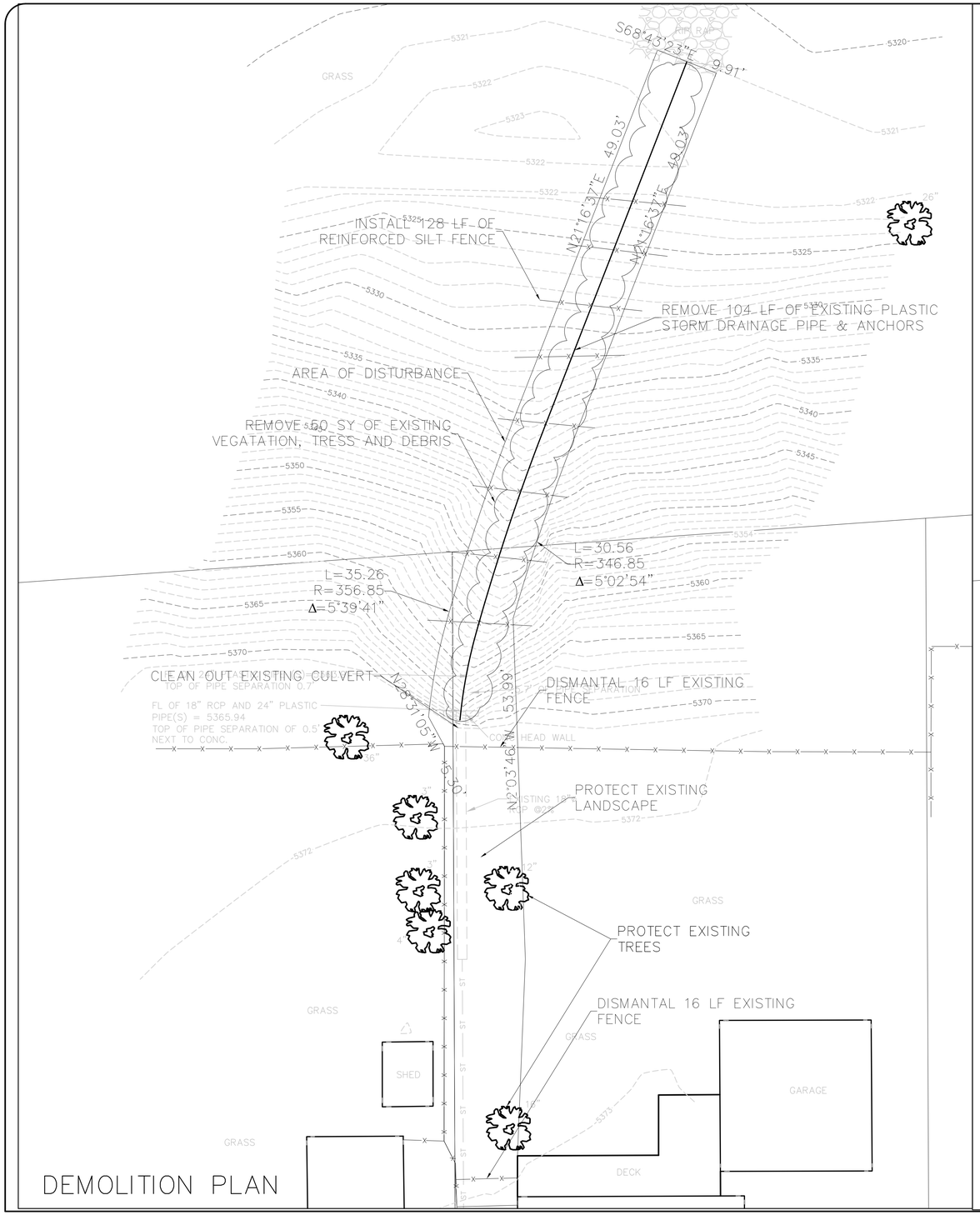

DEMOLITION PLAN

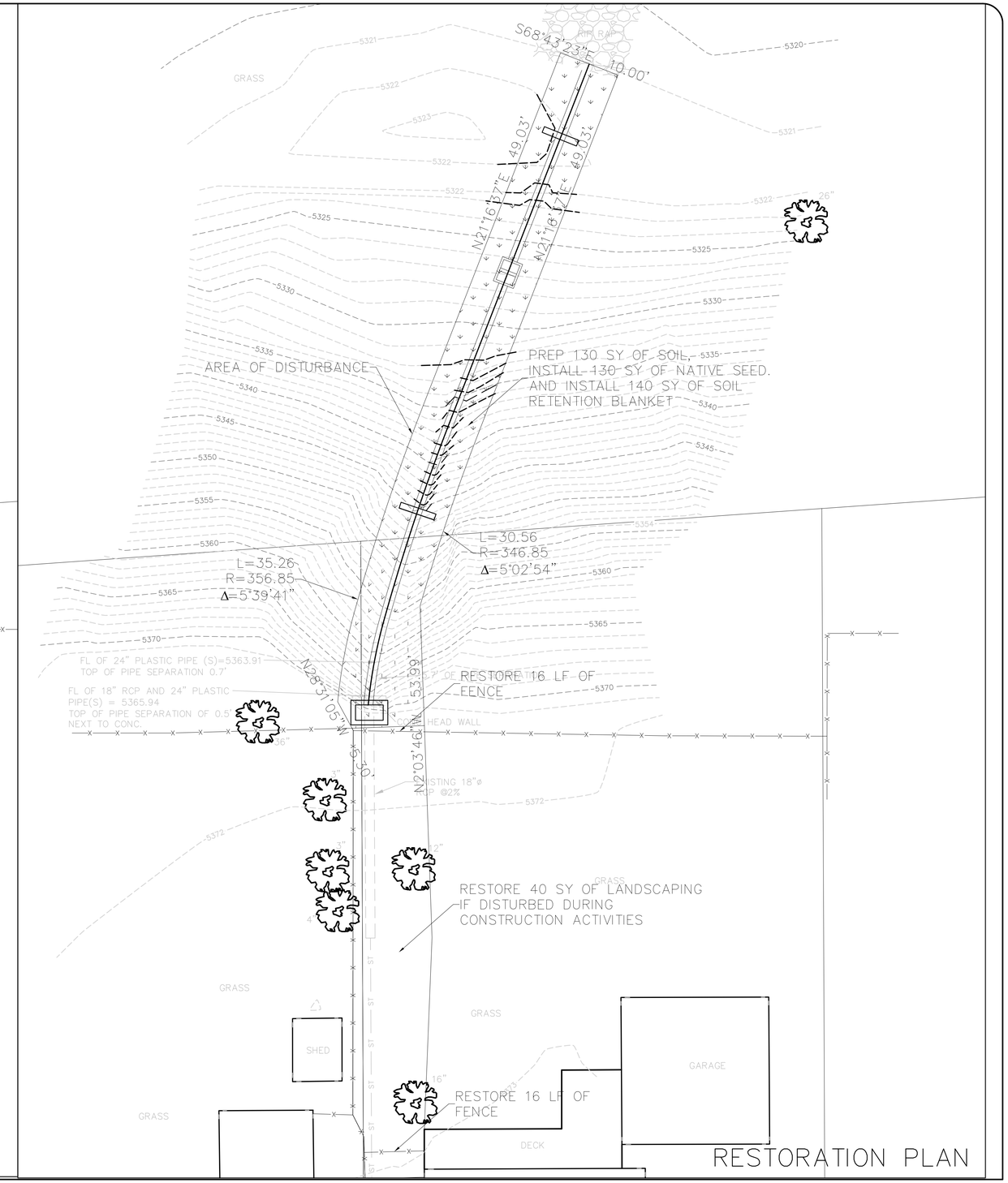

RESTORATION PLAN

NO.	REVISIONS	DATE	INIT.

DRAWN BY
DESIGN BY
CHK'D BY
APPROVED

SCALES
HORIZ. 1" = 30'
VERT.

CALL UTILITY NOTIFICATION CENTER OF COLORADO
1-800-922-1987
CALL 2-BUSINESS DAYS IN ADVANCE BEFORE YOU DIG, GRADE OR EXCAVATE FOR THE MARKING OF UNDERGROUND MEMBER UTILITIES

City of Wheat Ridge
DEPARTMENT OF PUBLIC WORKS
7500 WEST 29TH AVENUE
WHEAT RIDGE, COLORADO 80033
TELEPHONE: (303) 235-2861
FAX: (303) 235-2857

D-02-15
DRAINAGE IMPROVEMENT PROJECTS

W 47TH AVENUE (WEST SITE)
DRAINAGE RUNDOWN
DEMO & RESTORATION PLAN

SHEET 5
SHEETS 8

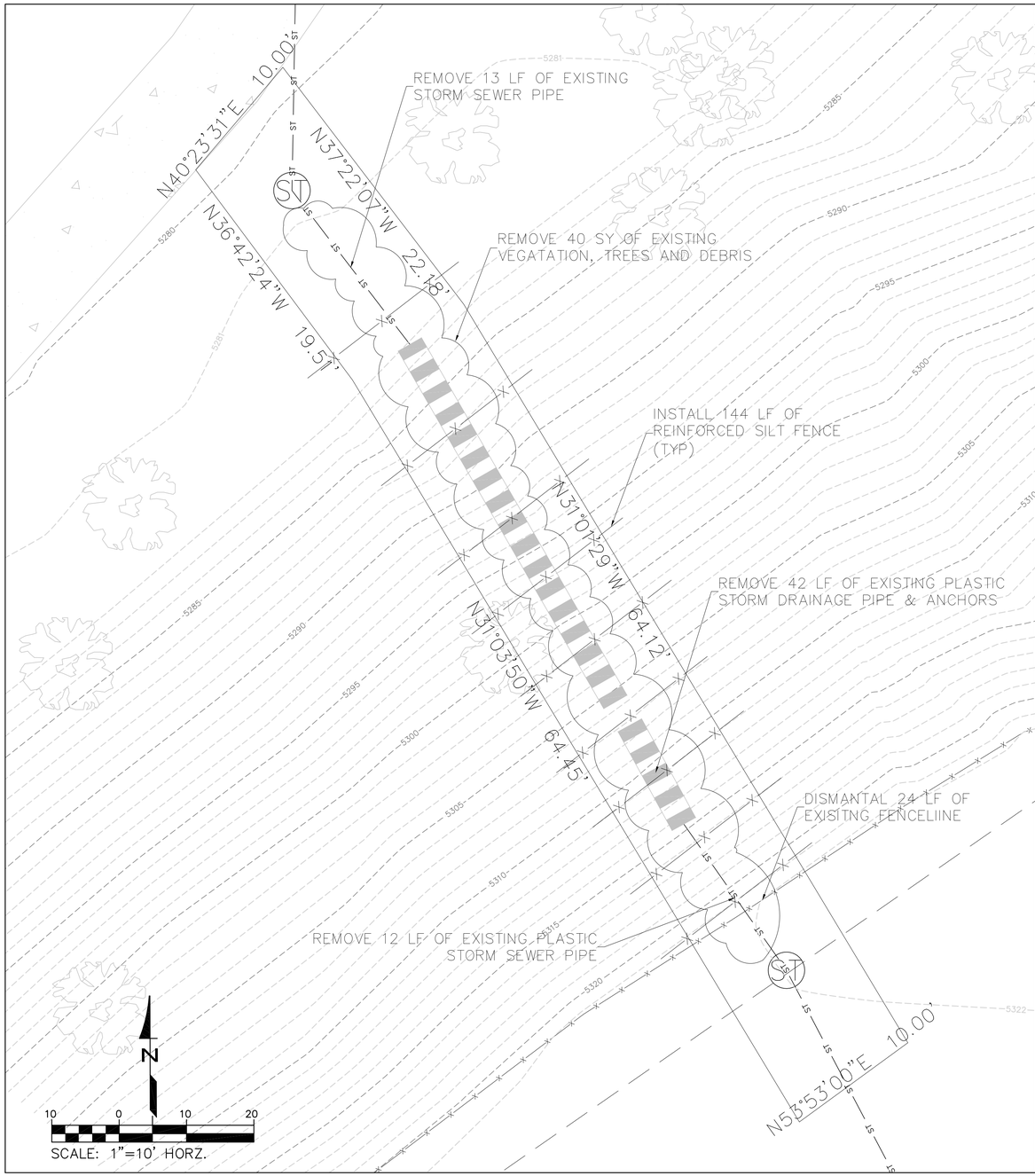

DEMOLITION PLAN

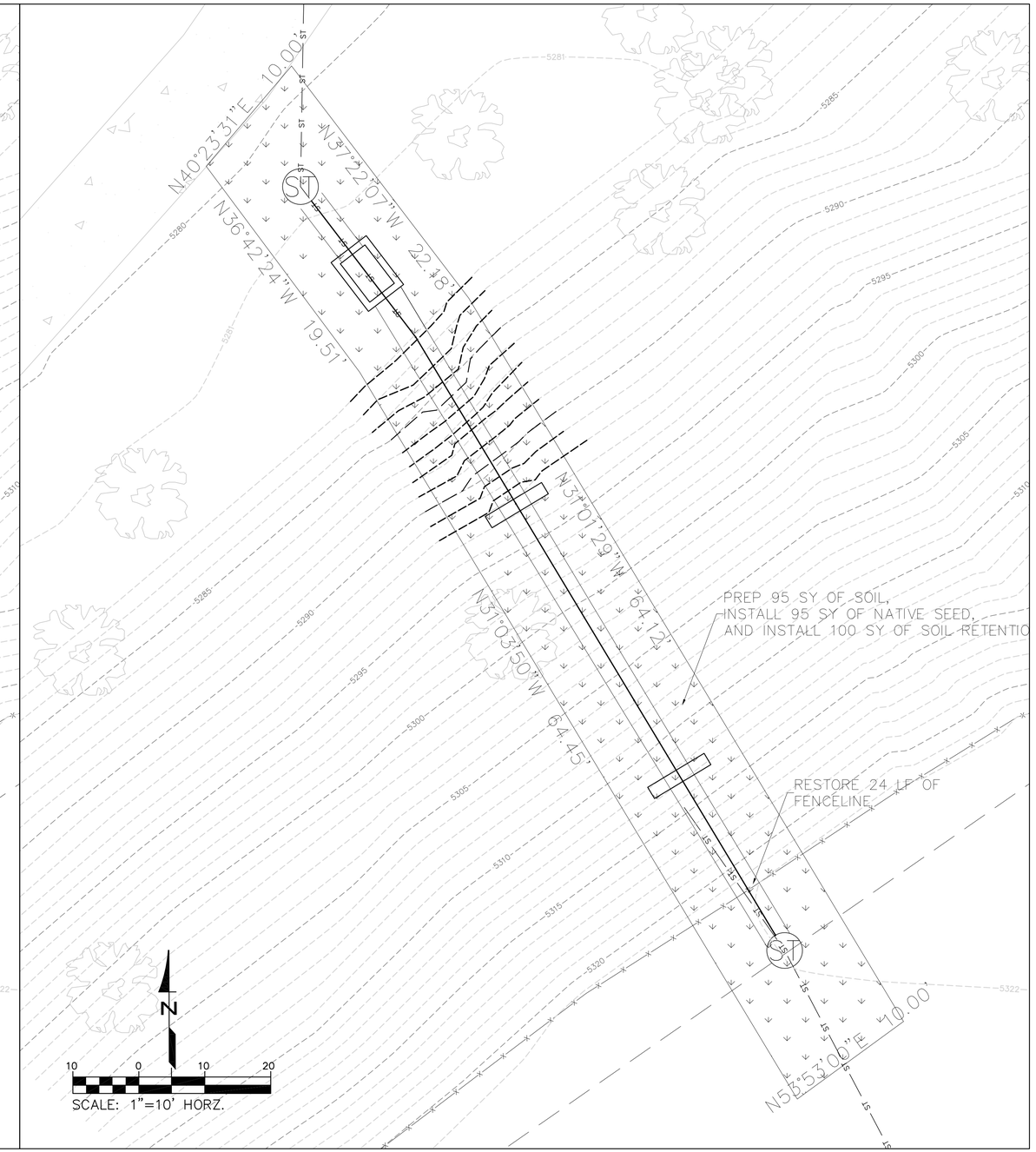

RESTORATION PLAN

NO.	REVISIONS	DATE	INIT.

DRAWN BY
DESIGN BY
CHK'D BY
APPROVED

SCALES
HORIZ. 1" = 30'
VERT.

CALL UTILITY NOTIFICATION CENTER OF COLORADO
1-800-922-1987
CALL 2-BUSINESS DAYS IN ADVANCE BEFORE YOU DIG, GRADE OR EXCAVATE FOR THE MARKING OF UNDERGROUND MEMBER UTILITIES

City of Wheat Ridge
DEPARTMENT OF PUBLIC WORKS
7500 WEST 29TH AVENUE
WHEAT RIDGE, COLORADO 80033
TELEPHONE: (303) 235-2861
FAX: (303) 235-2857

D-02-15
DRAINAGE IMPROVEMENT PROJECTS

W 48TH AVENUE (EAST SITE)
DRAINAGE RUNDOWN
DEMO & RESTORATION PLAN

SHEET 6
SHEETS 8

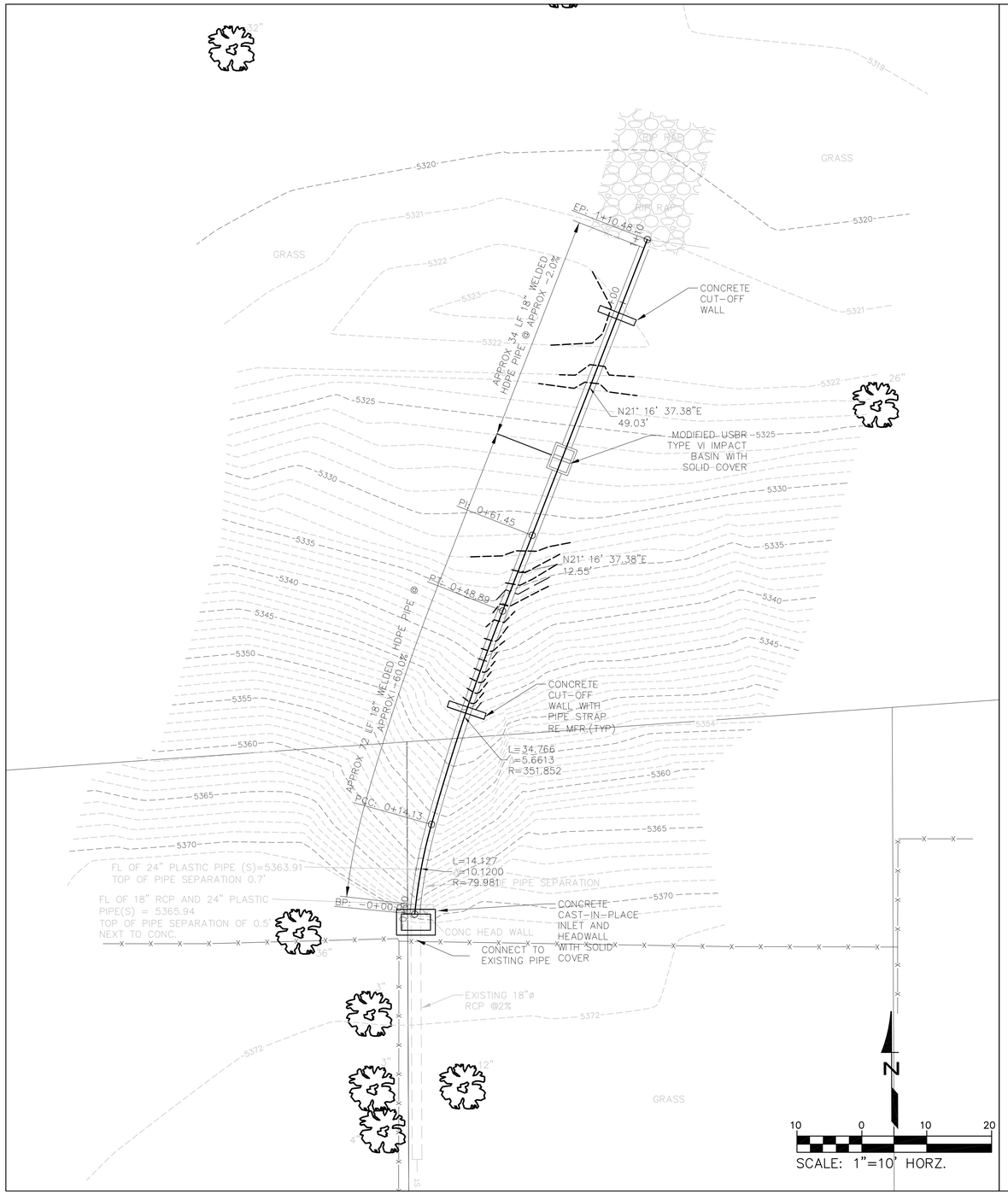

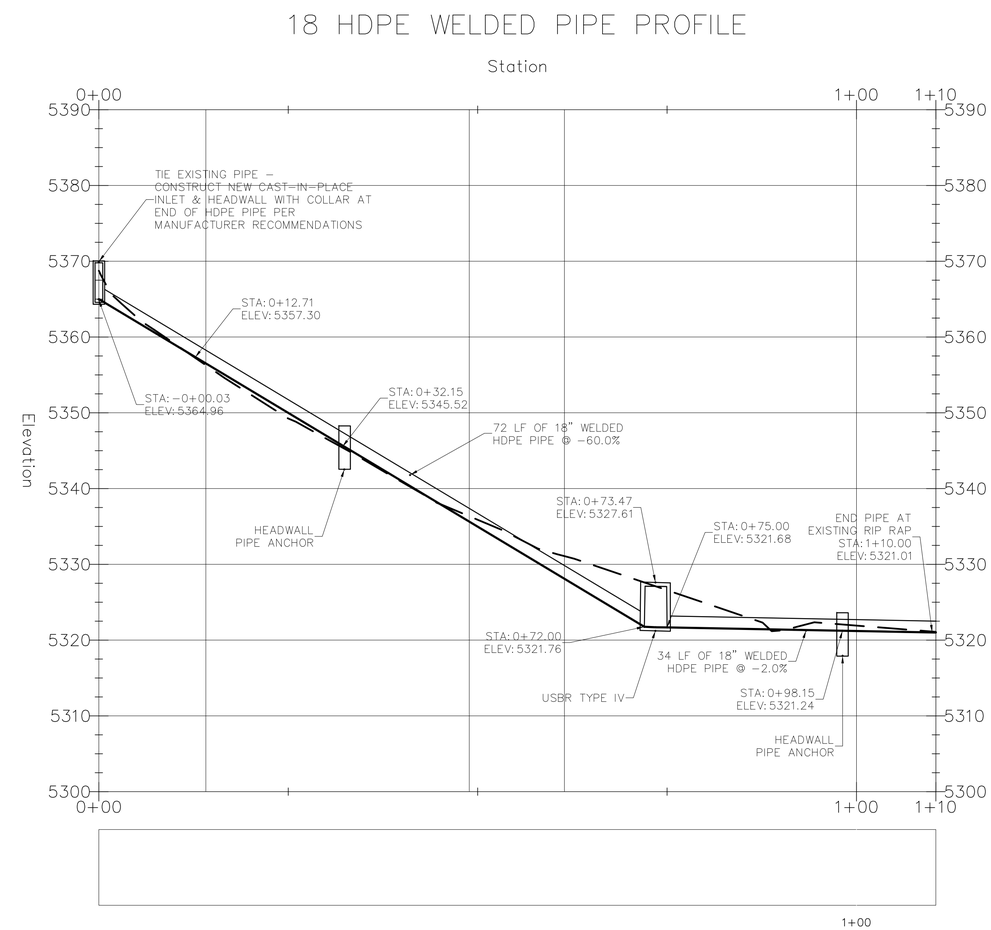

NO.	REVISIONS	DATE	INIT.

DRAWN BY
DESIGN BY
CHK'D BY
APPROVED

SCALES
HORIZ. 1" = 30'
VERT.

CALL UTILITY NOTIFICATION CENTER OF COLORADO
1-800-922-1987
CALL 2-BUSINESS DAYS IN ADVANCE BEFORE YOU DIG, GRADE OR EXCAVATE FOR THE MARKING OF UNDERGROUND MEMBER UTILITIES

City of Wheat Ridge
DEPARTMENT OF PUBLIC WORKS
7500 WEST 29TH AVENUE
WHEAT RIDGE, COLORADO 80033
TELEPHONE: (303) 235-2861
FAX: (303) 235-2857

D-02-15
DRAINAGE IMPROVEMENT PROJECTS

W 47TH AVENUE (WEST SITE)
18" WELDED HDPE RUNDOWN
PLAN & PROFILE

SHEET 7
SHEETS 8

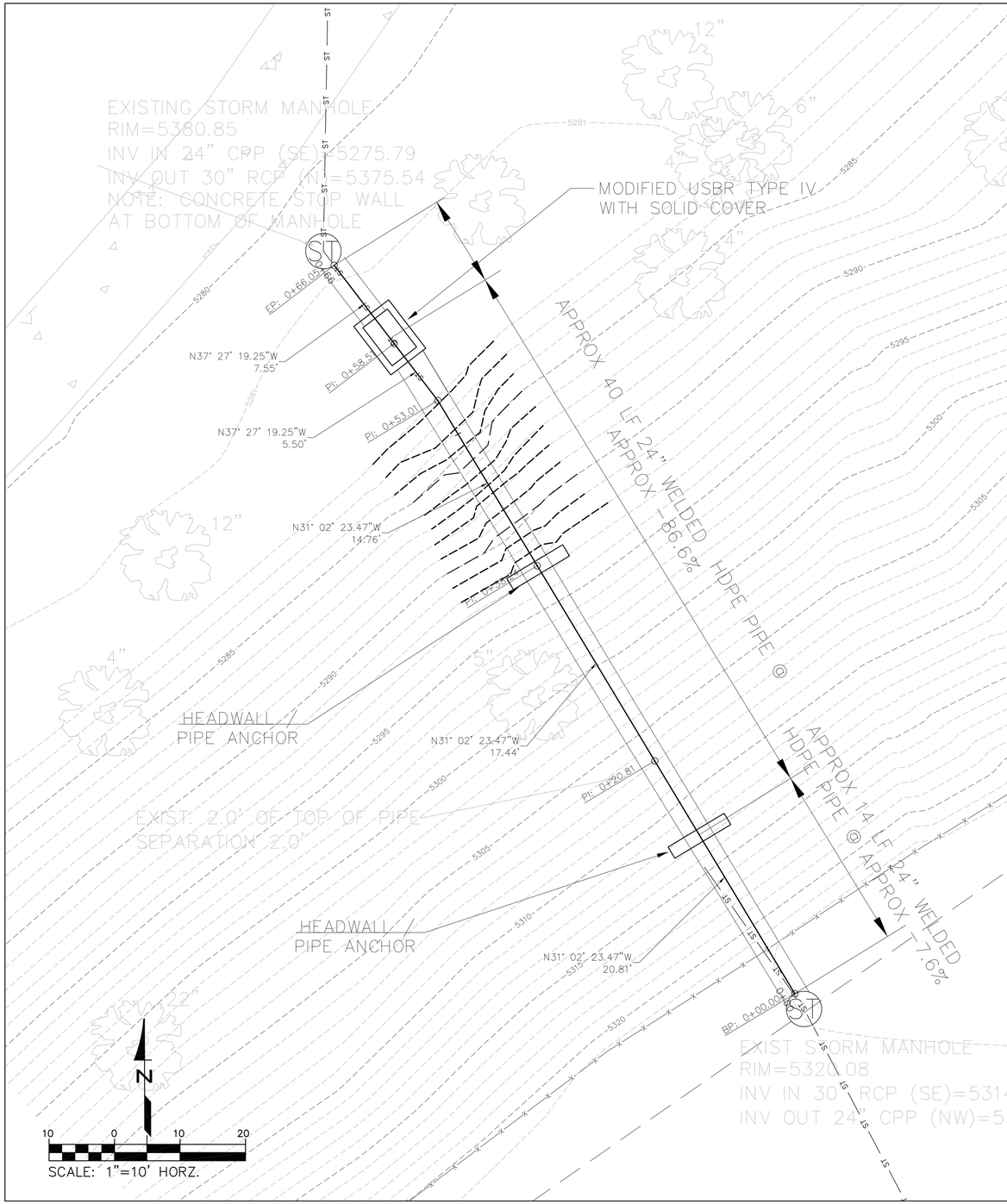

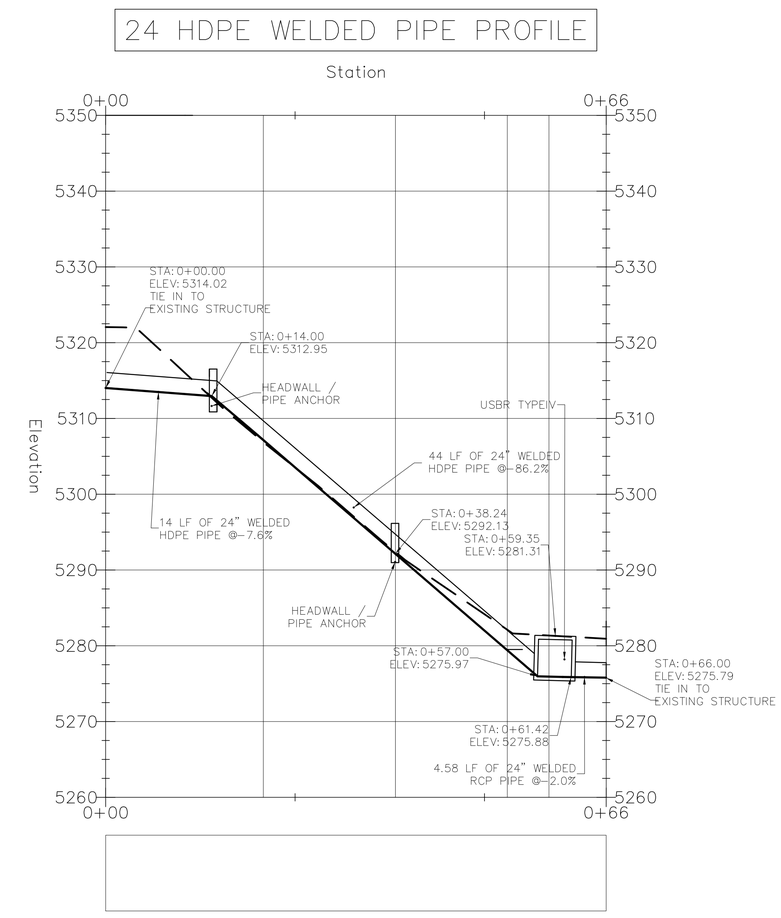

NO.	REVISIONS	DATE	INIT.

DRAWN BY
DESIGN BY
CHK'D BY
APPROVED

SCALES
HORIZ. 1" = 30'
VERT.

CALL UTILITY NOTIFICATION CENTER OF COLORADO
1-800-922-1987
CALL 2-BUSINESS DAYS IN ADVANCE BEFORE YOU DIG, GRADE OR EXCAVATE FOR THE MARKING OF UNDERGROUND MEMBER UTILITIES

City of Wheat Ridge
DEPARTMENT OF PUBLIC WORKS
7500 WEST 29TH AVENUE
WHEAT RIDGE, COLORADO 80033
TELEPHONE: (303) 235-2861
FAX: (303) 235-2857

D-02-15
DRAINAGE IMPROVEMENT
PROJECTS

W 48TH AVENUE (EAST SITE)
24" WELDED HDPE RUNDOWN
PLAN & PROFILE

SHEET 8
SHEETS 8