GENERAL NOTES:

1. PRIOR TO FABRICATION, SIX SETS OF SHOP DRAWINGS, SEALED AND SIGNED BY A REGISTERED COLORADO PROFESSIONAL ENGINEER, WHICH COMPLY WITH THE REQUIREMENTS OF SECTION 105.02 OF THE CDOT STANDARD SPECIFICATIONS FOR ROAD AND BRIDGE CONSTRUCTION, 2011, SHALL BE SUBMITTED TO CITY OF WHEAT RIDGE ENGINEERING. NEW SIGNAL POLE BASE PLATE BOLT CIRCLE SHALL MATCH CITY OF WHEAT RIDGE STANDARDS. SEE SIGNAL ELEVATIONS AND DETAILS.
2. TRAFFIC SIGNAL CONSTRUCTION SHALL CONFORM TO CDOT STANDARD PLANS S-614-40A AS AMENDED WITHIN CITY OF WHEAT RIDGE STANDARD SPECIFICATIONS 614.08.
3. ALL POLES AND MAST ARMS SHALL BE FABRICATED WITH ASTM A572 GRADE 65 STEEL. LUMINAIRE ARMS MAY BE FABRICATED WITH ASTM A595 GRADE A STEEL WITH A MINIMUM YIELD POINT OF 55 KSI.
4. ALL POLES AND MAST ARMS SHALL COMPLY WITH THE DIMENSIONAL TOLERANCES SPECIFIED IN ASTM A500, A501, OR A595.
5. ALL POLES AND MAST ARMS SHALL BE ROUND OR DODECAGONAL TUBES WITH A 0.14 IN/FT TAPER.
6. HARDENED WASHERS SHALL CONFORM TO ASTM F436.
7. ALL POLES AND MAST ARMS SHALL BE POWDER COATED BLACK AFTER FABRICATION IN ACCORDANCE WITH ASTM A123.
8. POLE AND MAST ARM SPLICES SHALL BE MECHANICALLY FORCED TOGETHER FOR A SNUG FIT.
9. BLIND BOLTS SHALL BE A307 GRADE A STEEL AND ARE NOT REQUIRED FOR MULTISIDED POLES. MECHANICAL ALTERNATIVES TO BLIND BOLTS UTILIZING FRICTION, KEYS, INTERLOCKING TEETH OR A COMBINATION THEREOF TO PREVENT THE BUILT-UP BOX FROM TWISTING ON THE POLE MAY BE USED AS APPROVED BY CITY OF WHEAT RIDGE ENGINEERING.
10. ALL MAST ARMS MORE THAN 35 FT IN LENGTH SHALL BE TWO PIECE CONSTRUCTION TO LIMIT ARM WEIGHTS.
11. GALVANIZED ASTM A325 H.S. BOLTS SHALL BE USED FOR ATTACHING LUMINAIRE MAST ARMS AND SIGNAL HEAD MAST ARMS. A LUBRICATED TIGHTENING TORQUE OF 178 FT-LBS FOR 3/4" DIAMETER BOLTS, 395 FT-LBS FOR 1 INCH DIAMETER BOLTS AND 1300 FT-LBS FOR 1-1/2" INCH DIAMETER BOLTS SHALL BE USED TO TIGHTEN ALL H.S. BOLTS. MAST ARMS SHALL BE TEMPORARILY SUPPORTED TO TAKE LOAD OFF OF FIELD CONNECTIONS WHILE BOLTS ARE TIGHTENED IN ORDER TO FIRMLY SEAT THE FLANGE PLATE. BOLTS SHALL BE SEQUENTIALLY TIGHTENED. ASSUMING 12 BOLTS AND A CLOCK FACE, THE TIGHTENING SEQUENCE WOULD BE 12, 6, 1, 7, ETC. THIS PROCESS SHALL BE CONTINUED UNTIL NO LOOSE BOLTS ARE FOUND AFTER ALL BOLTS HAVE BEEN INITIALLY TIGHTENED. THE REQUIRED, FINAL TIGHTENING TORQUE SHALL BE ACHIEVED AND DOCUMENTED UPON COMPLETION.
12. CAST POLE END CAP TO BE SECURED IN PLACE WITH 3 SET SCREWS.
13. ALL SIGNAL HEADS, SIGNS, AND HARDWARE SHALL BE FIELD POSITIONED. SEE SIGNAL ELEVATIONS AND DETAILS.
14. ACCESSORIES TO BE HOT DIP GALVANIZED IN ACCORDANCE WITH ASTM A153.
15. ALL PLATES SHALL BE FABRICATED WITH AASHTO M270 (ASTM A709) GRADE 36 STEEL AND SHALL COMPLY WITH THE DIMENSIONAL TOLERANCES SPECIFIED IN ASTM A6. ALL HANDHOLES SHALL BE FABRICATED WITH ASTM A572 GRADE 42 STEEL.
16. LEVELING CONCRETE SHALL BE 3000 PSI AIR ENTRAINED CONCRETE VIBRATED IN PLACE BELOW THE POLE BASE PLATE.
17. THE DESIGNS HEREIN SHALL ASSUME THAT SIGNALS ARE INSTALLED WITHIN THE ROADWAY PRISM WITH THE MINIMUM FOLLOWING SOIL PARAMETERS:
    SOIL DENSITY = 110 LB./CU.FT.
    SOIL COHESION = 750 LB./SQ.FT. FOR MEDIUM STIFF COHESIVE SOIL
    SOIL ø ANGLE = 30° FOR MEDIUM DENSE COHESIONLESS SOIL
    SF = 1.5 FOR TORSIONAL RESISTANCE AND 3.0 FOR FLEXURAL RESISTANCE
18. CONTACT THE CITY OF WHEAT RIDGE IF ANY OF THE FOLLOWING SITUATIONS ARE ENCOUNTERED DURING DRILLING:
    A. SIGNALS WILL NOT BE INSTALLED WITHIN THE ROADWAY PRISM.
    B. THE SOIL HAS A HIGH ORGANIC CONTENT OR CONSISTS OF SATURATED SILT AND CLAY.
    C. THE SITE WILL NOT SUPPORT THE WEIGHT OF THE DRILLING RIG.
    D. THE FOUNDATION SOILS ARE NOT HOMOGENOUS.
    E. FIRM BEDROCK IS ENCOUNTERED.
19. CAISSONS SHALL BE PLACED AGAINST UNDISTURBED EARTH.
20. CAISSONS SHALL BE CONSTRUCTED WITH AIR ENTRAINED CLASS BZ CONCRETE IN ACCORDANCE WITH SECTION 503 OF THE CDOT STANDARD SPECIFICATIONS FOR ROAD AND BRIDGE CONSTRUCTION, 2011 AND CITY OF WHEAT RIDGE STANDARD SPECIFICATION 614.10(e). REINFORCING STEEL SHALL BE GRADE 60.
21. CAISSON CONCRETE SHALL REACH THE SEVEN DAY PREDICTED STRENGTH PRIOR TO INSTALLING THE SIGNAL STRUCTURE.
22. U-BOLTS AND ANCHOR BOLTS SHALL BE FABRICATED WITH AASHTO M314-90 GRADE 55 STEEL.
23. ANCHOR BOLTS SHALL BE FABRICATED WITH HEAVY HEX NUTS AND FLAT WASHERS. THREAD UPPER 12 INCHES AND GALVANIZE UPPER 13 INCHES OF THE ANCHOR BOLTS. FIELD WELDING OF ANCHOR BOLTS TO REBAR DURING ERECTION WILL NOT BE ALLOWED. ANCHOR BOLTS SHALL BE SET WITH A STEEL TEMPLATE UNTIL THE CONCRETE HAS CURED AT LEAST TWO DAYS. THE ANCHOR BOLTS SHALL BE TIGHTENED USING THE TURN-OF-NUT METHOD. THE BOLTS SHALL FIRST BE TIGHTENED TO SNUG TIGHT, WHICH IS DEFINED AS THE TIGHTNESS THAT EXISTS WHEN THE UPPER AND LOWER NUTS ARE IN FIRM CONTACT WITH THE BASE PLATE. WITH MAST ARMS FREE TO DEFLECT, THE UPPER AND LOWER NUTS SHALL THEN EACH BE ROTATED AN ADDITIONAL 1/12 TURN (30° ± 5°) WITH A SLUGGING, HYDRAULIC OR AIR IMPACT WRENCH.
24. WELDING OF STEEL SHALL CONFORM TO THE REQUIREMENTS OF ANSI/AWS D1.1. ALL AREAS TO BE WELDED SHALL BE GROUND TO BRIGHT METAL. ALL WELDING AND REQUIRED TESTING SHALL BE COMPLETE BEFORE ANY MATERIAL IS GALVANIZED. ALL CIRCUMFERENTIAL WELDS SHALL BE NON-DESTRUCTIVELY TESTED USING THE ENHANCED MAGNETIC PARTICLE METHOD IN ACCORDANCE WITH SUBSECTION 509.18 (D) OF THE CDOT STANDARD SPECIFICATIONS FOR ROAD AND BRIDGE CONSTRUCTION, 2011. THE ACCEPTANCE CRITERIA IS STATED IN TABLE 6.1 OF ANSI/AWS D1.1. ALL LONGITUDINAL WELDS WITHIN 6 INCHES OF FULL PENETRATION CIRCUMFERENTIAL GROOVE WELDS AND FULL PENETRATION GROOVE WELDS SHALL BE INSPECTED AS SPECIFIED ABOVE. MAXIMUM WELD UNDERCUT SHALL BE 0.01 INCHES.
25. ALL ELECTRICAL CONNECTIONS TO THE SIGNALS SHALL BE GROUNDED IN ACCORDANCE WITH APPLICABLE ELECTRICAL CODES.
26. TRAFFIC SIGNAL STRUCTURES SHALL BE DESIGNED IN ACCORDANCE WITH THE LATEST EDITION OF AASHTO STANDARD SPECIFICATIONS FOR STRUCTURAL SUPPORTS FOR HIGHWAY SIGNS, LUMINAIRES, AND TRAFFIC SIGNALS.
27. PER CITY OF WHEAT RIDGE SPECIFICATION 614.08, A DESIGN WIND VELOCITY OF 90 MPH SHALL BE USED. THE SPECIFIED AVERAGE TRUCK SPEED TO BE USED FOR THE DESIGN OF TRUCK INDUCED GUST LOADS AT THIS INTERSECTION LOCATION EQUALS THE DESIGN SPEED OF 40 MPH ON 44TH AVENUE.
28. CERTIFIED MILL TEST REPORTS INCLUDING CHARPY V-NOTCH (CVN) TEST RESULTS, WELD INSPECTION REPORTS AND ENHANCED MAGNETIC PARTICLE TEST REPORTS SHALL BE SUBMITTED TO CITY OF WHEAT RIDGE ENGINEERING AS SOON AS THEY BECOME AVAILABLE. CVN TEST RESULTS FOR ASTM A572 GRADES 55 AND 65 STEEL SHALL HAVE A MINIMUM VALUE OF 15 FT-LBS AT 40°F AS PER THE H FREQUENCY TEST REQUIREMENTS IN AASHTO T243 (ASTM A673).
29. TRAFFIC SIGNALS MOUNTED ON MAST ARMS SHALL BE FURNISHED WITH ASTRO TYPE MOUNTING BRACKETS OR THE EQUIVALENT AND SHALL BE INSTALLED 90 DEGREES TO THE ROADWAY. SEE SIGNAL ELEVATIONS AND DETAILS.
30. END SECTION DIAMETERS MUST BE INCREASED TO ACCOMMODATE OUT-OF-ROUNDNESS, GALVANIZING THICKNESS AND SEAM WELD PROFILES TO PROVIDE THE MINIMUM REQUIRED ARM SLIP SPLICE LENGTHS AND POLE MEMBER OVERLAPS.
31. USE 35' OF 3/8" HIGH STRENGTH CHAIN (SAFE WORKING LOAD OF 5,000 LB.), TWO "S" SHAPED HOOKS PROPERLY FORGED FROM 1" SQUARE BAR STOCK AND TWO 4,000 LB. CAPACITY COME-ALONGS TO SEAT THE POLE END SECTION ON ITS BASE SECTION BY ATTACHING THE COME-ALONGS TO OPPOSING ACCESS HOLES IN THE BUILT-UP BOX WITH THE "S" SHAPED HOOKS AND PULLING AGAINST THE CHAIN, WHICH IS STRUNG UNDERNEATH THE POLE BASE PLATE. APPLY ENOUGH FORCE TO ALIGN THE WIRE ACCESS HOLES AND TO SEAT THE SLIP SPLICE WITHIN 4" OF THE SPECIFIED LENGTH.
32. SECURE ARM FLANGE PLATE, POLE BASE PLATE, AND CONNECTION FACEPLATE DURING WELDING TO PREVENT DISTORTION.
33. ONE DRILLED HOLE WITH A MAXIMUM DIAMETER OF 3/4" IS ALLOWED AT LOCATIONS REQUIRED TO ACCOMMODATE ELECTRICAL WIRING.
34. GALLOPING LOADS ARE EXCLUDED FROM FATIGUE DESIGN AND CATEGORY II IMPORTANCE FACTORS ARE TO BE USED.
35. THE SPECIFIED DESIGN LIFE AT THIS LOCATION SHALL BE 50 YEARS PER AASHTO CRITERIA.
36. ALL TRAFFIC SIGNAL FACES SHALL BE OF THE INDIVIDUAL SECTION, ADJUSTABLE TYPE, BLACK POLYCARBONATE.
37. VISORS ARE REQUIRED AND SHALL BE DETACHABLE, 12 INCH TUNNEL TYPE, OPEN AT THE BOTTOM; BE BLACK IN COLOR ON THE OUTSIDE AND FLAT BLACK ON THE INSIDE.
38. ALL VEHICLE AND PEDESTRIAN INDICATIONS SHALL BE L.E.D. TYPE CONFORMING TO THE REQUIREMENTS IN THE CITY OF WHEAT RIDGE STANDARD SPECIFICATION 713.11.

SIGNAL NO.	NORTHING	EASTING	MASTARM L, ft.	MASTARM θ, deg	CAISSON Dia, in.	LUM. MAST L, ft.
1	708519.25	119053.29	50' (45')	270°	42"	10'
2	EXISTING	EXISTING	35'	90°	EXISTING	10'
3	708418.08	119108.29	N/A	N/A	18"	N/A
4	EXISTING	EXISTING	20'	0°	EXISTING	10'
5	708426.05	119039.47	N/A	N/A	18"	N/A

SIGNAL PHASING:

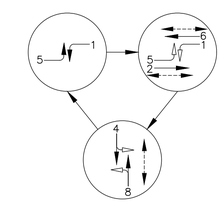

KEY

- PROTECTED TRAFFIC MOVEMENT
- PERMISSIVE TRAFFIC MOVEMENT
- PEDESTRIAN MOVEMENT
- # PHASE NUMBER

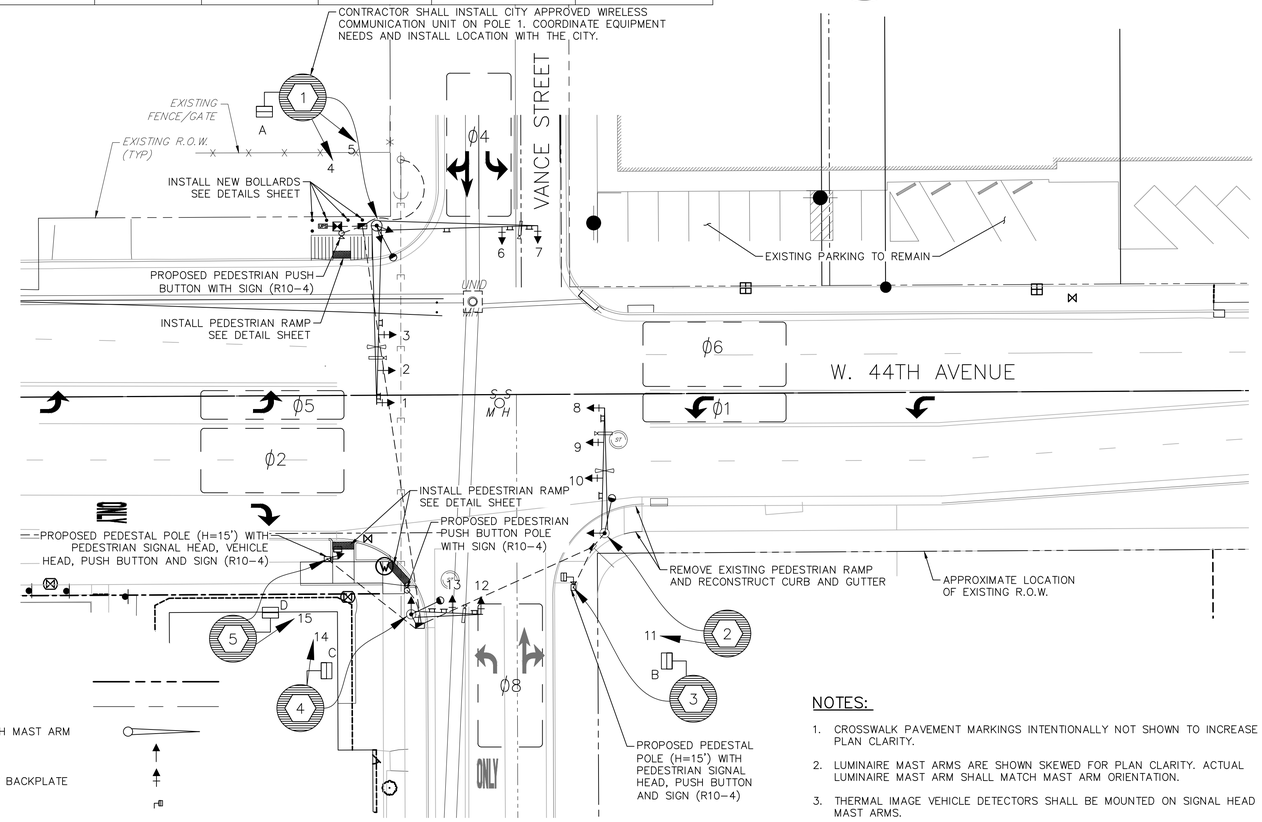

LEGEND

- PROPERTY LINE
- SECTION LINE
- TRAFFIC SIGNAL POLE WITH MAST ARM
- TRAFFIC SIGNAL HEAD
- TRAFFIC SIGNAL HEAD W/ BACKPLATE
- PEDESTRIAN SIGNAL HEAD
- PEDESTRIAN PUSH BUTTON
- PEDESTRIAN PUSH BUTTON POLE
- PEDESTAL POLE
- TRAFFIC SIGNAL CONTROLLER AND CABINET
- PULL BOX (30"x18"x12"d) MIN
- UNINTERRUPTIBLE POWER SUPPLY AND CABINET (UPS)
- CONDUIT - PVC SCHEDULE 80
- GROUND SIGN
- SIGN ON MASTARM
- LUMINAIRE (LED)
- EMERGENCY PRE-EMPTION UNIT
- THERMAL IMAGE VEHICLE DETECTOR
- THERMAL DETECTION ZONE (TYPICAL) AND PHASE NUMBER (ø2)

PROPOSED SIGNAL HEADS:

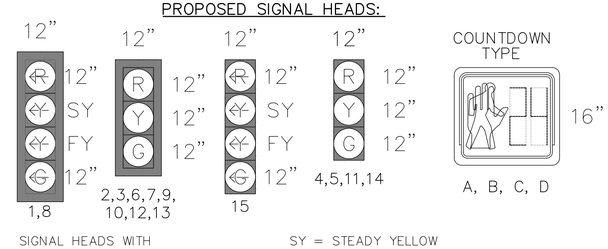

SIGNAL HEADS WITH LOUVERED BACKPLATE

SY = STEADY YELLOW
FY = FLASHING YELLOW

NOTES:

1. CROSSWALK PAVEMENT MARKINGS INTENTIONALLY NOT SHOWN TO INCREASE PLAN CLARITY.
2. LUMINAIRE MAST ARMS ARE SHOWN SKEWED FOR PLAN CLARITY. ACTUAL LUMINAIRE MAST ARM SHALL MATCH MAST ARM ORIENTATION.
3. THERMAL IMAGE VEHICLE DETECTORS SHALL BE MOUNTED ON SIGNAL HEAD MAST ARMS.
4. ALL PEDESTRIAN PUSH BUTTONS SHALL BE INSTALLED TO BE ACCESSIBLE WITHIN 10 INCHES OF THE ADJACENT PEDESTRIAN RAMP.

N

20 10 0 20 40
SCALE: 1"=20'
ALL DIMENSIONS SHOWN ARE U.S. SURVEY FEET

COLORADO 811
KNOW WHAT'S BELOW. CALL BEFORE YOU DIG.

CALL 811 2-BUSINESS DAYS IN ADVANCE BEFORE YOU DIG, GRADE OR EXCAVATE FOR MARKING OF UNDERGROUND MEMBER UTILITIES

MARTIN/MARTIN ASSUMES NO RESPONSIBILITY FOR UTILITY LOCATIONS. THE UTILITIES SHOWN ON THIS DRAWING HAVE BEEN PLOTTED FROM THE BEST AVAILABLE INFORMATION. IT IS, HOWEVER, THE CONTRACTORS RESPONSIBILITY TO FIELD VERIFY THE SIZE, MATERIAL, HORIZONTAL AND VERTICAL LOCATION OF ALL UTILITIES PRIOR TO THE COMMENCEMENT OF ANY CONSTRUCTION.

MARTIN / MARTIN
CONSULTING ENGINEERS
12499 West Colfax Ave.
Suite B-250
Lakewood, Colorado 80215
303.431.6100
FAX 303.431.4028

COLORADO REGISTERED PROFESSIONAL ENGINEER RONALD G. WISE 30594 6/24/16

44TH & VANCE SIGNAL

TRAFFIC SIGNAL PLAN

No.	Description of Revisions	Date	Name

Date: MARCH 15, 2016
Job Number: 15.0511
Design By: A. MAXWELL
Drawn By: E. BERNAL
Checked By: A. MAXWELL

Sheet Number:

Job Number: Sheet Number: 1

Location: G:\HAYNES\15.0511-44th & Vance Traffic Signal Modification\PLANS\
Drawn By: E. BERNAL
Project Manager: A. MAXWELL
Designed By: A. MAXWELL
X References:
Plot Date: 05/14/12 CAM
Tab Name: 1-Signal Plan
Profile View(s):
Model Space Plan view(s): PLAN
Other View:
CAD INFORMATION
Paper Space Plot view: PLOT
Dwg. Name: 01_SignalPlan.dwg

CONDUIT / WIRING GENERAL NOTES:

1. TRAFFIC SIGNAL CONSTRUCTION SHALL CONFORM TO CDOT STANDARD PLANS, M&S STANDARDS S-614-40A, AS AMENDED WITHIN CITY OF WHEAT RIDGE STANDARD SPECIFICATIONS 614.08.
2. ALL CONDUIT SHALL CONFORM TO ASTM-FF 441 PVC SCHEDULE 80.
3. CONDUIT LOCATIONS SHOWN ARE APPROXIMATE AND MAY BE ADJUSTED IN THE FIELD TO AVOID UTILITY CONFLICTS. CONTRACTOR TO DOCUMENT LOCATION IF DIFFERENT FROM PLANS AND PROVIDE AS-BUILT MARK-UP PLANS TO THE CITY OF WHEAT RIDGE.
4. LARGE SIZE PULL BOX SHALL BE USED ADJACENT TO THE CONTROLLER CABINET. SMALL PULL BOXES MAY BE USED FOR ADVANCE DETECTOR CONDUIT RUNS AND INTERCONNECTION CONDUIT RUNS. ALL OTHER PULL BOXES SHALL BE MEDIUM SIZE UNLESS OTHERWISE SPECIFIED ON THE PLANS.
5. ALL CONDUIT IN PULL BOXES SHALL BE SEALED OR CAPPED.
6. CONTRACTOR SHALL COORDINATE THE NEW SIGNAL CONTROLLER POINT OF ELECTRICAL SERVICE WITH XCEL ENERGY.
7. NEW UNDERGROUND UTILITIES MAY HAVE BEEN INTALLED IN ADDITION TO WHAT IS SHOWN IN THE PLANS. THE CONTRACTOR SHALL CONTACT U.N.C.S. AND COORDINATE WITH ADJACENT SITE DEVELOPMENT TO ENSURE THERE ARE NO IMPACTS TO UNDERGROUND UTILITIES.

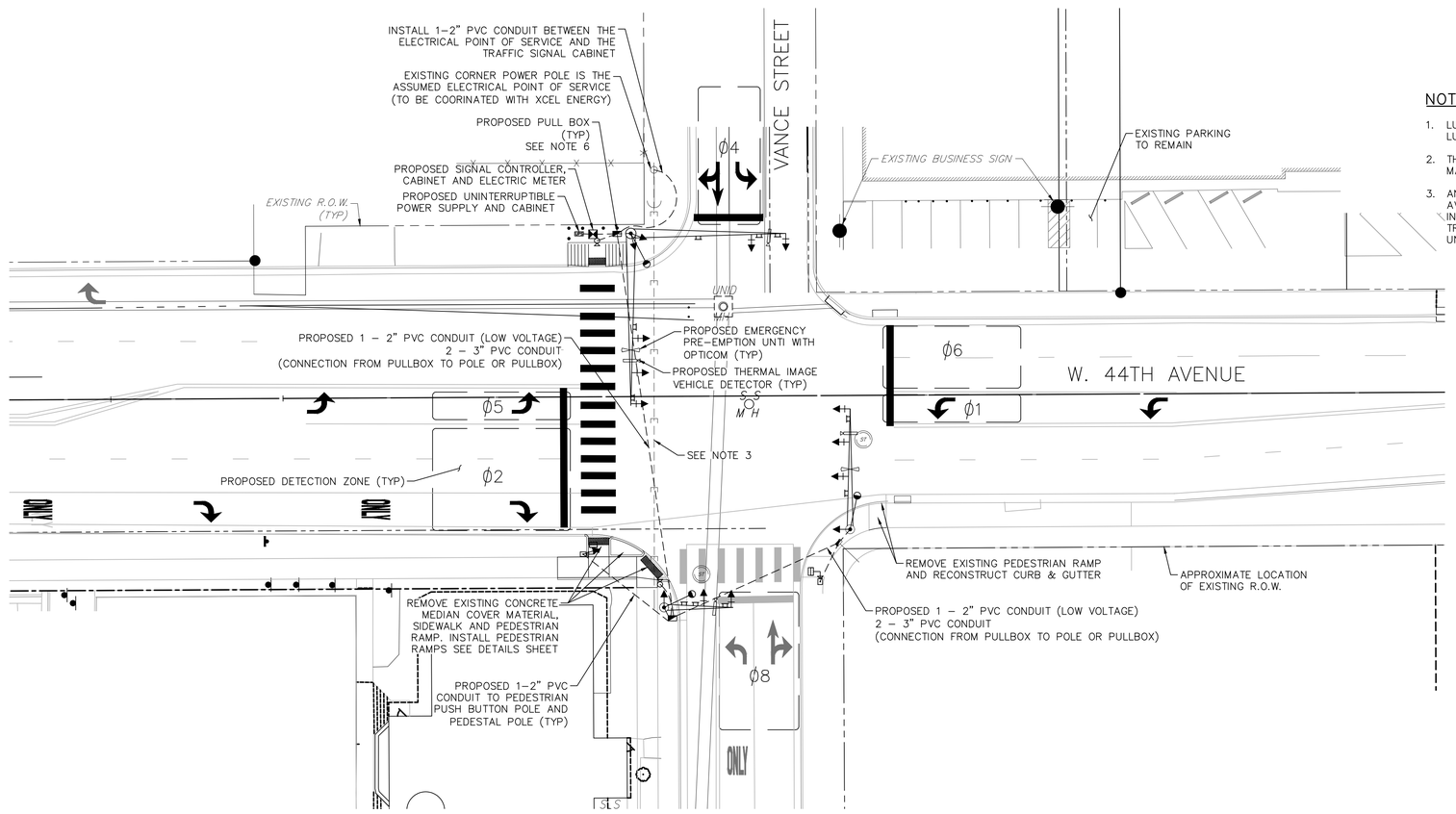

SIGNAL CONDUIT AND DETECTION ZONES SCHEMATIC

LEGEND

- PROPERTY LINE
- SECTION LINE
- TRAFFIC SIGNAL POLE WITH MAST ARM
- TRAFFIC SIGNAL HEAD
- TRAFFIC SIGNAL HEAD W/ BACKPLATE
- PEDESTRIAN SIGNAL HEAD
- PEDESTRIAN PUSH BUTTON
- PEDESTRIAN PUSH BUTTON POLE
- PEDESTAL POLE
- TRAFFIC SIGNAL CONTROLLER AND CABINET
- PULL BOX (30"x18"x12"d) MIN
- UNINTERRUPTIBLE POWER SUPPLY AND CABINET (UPS)
- CONDUIT - PVC SCHEDULE 80
- GROUND SIGN
- SIGN ON MASTARM
- LUMINAIRE (LED)
- EMERGENCY PRE-EMPTION UNIT
- THERMAL IMAGE VEHICLE DETECTOR
- THERMAL DETECTION ZONE (TYPICAL) AND PHASE NUMBER (ϕ2)

NOTES:

1. LUMINAIRE MAST ARMS ARE SHOWN SKEWED FOR PLAN CLARITY. ACTUAL LUMINAIRE MAST ARM SHALL MATCH MAST ARM ORIENTATION.
2. THERMAL IMAGE VEHICLE DETECTORS SHALL BE MOUNTED ON SIGNAL HEAD MAST ARMS.
3. AN EXISTING OVERHEAD ELECTRIC LINE RUNS NORTH-SOUTH OVER 44TH AVENUE BETWEEN THE NORTHWEST AND SOUTHWEST CORNERS OF THE INTERSECTION. THE OVERHEAD LINE IS IN CONFLICT WITH THE PROPOSED TRAFFIC SIGNAL MAST ARMS. CONTRACTOR SHALL COORDINATE THE UNDERGROUND RELOCATION OF THIS ELECTRIC LINE WITH XCEL ENERGY.

N

20 10 0 20 40
SCALE: 1"=20'
ALL DIMENSIONS SHOWN ARE U.S. SURVEY FEET

COLORADO 811
KNOW WHAT'S BELOW. CALL BEFORE YOU DIG.

CALL 811 2-BUSINESS DAYS IN ADVANCE BEFORE YOU DIG, GRADE OR EXCAVATE FOR MARKING OF UNDERGROUND MEMBER UTILITIES

MARTIN/MARTIN ASSUMES NO RESPONSIBILITY FOR UTILITY LOCATIONS. THE UTILITIES SHOWN ON THIS DRAWING HAVE BEEN PLOTTED FROM THE BEST AVAILABLE INFORMATION. IT IS, HOWEVER, THE CONTRACTORS RESPONSIBILITY TO FIELD VERIFY THE SIZE, MATERIAL, HORIZONTAL AND VERTICAL LOCATION OF ALL UTILITIES PRIOR TO THE COMMENCEMENT OF ANY CONSTRUCTION.

MARTIN / MARTIN
CONSULTING ENGINEERS
12499 West Colfax Ave.
Suite B-150
Lakewood, CO 80215
303.431.6100
FAX 303.431.4028

COLORADO REGISTERED PROFESSIONAL ENGINEER
RONALD G. MIKO
6/24/16
30594

44TH & VANCE SIGNAL

TRAFFIC SIGNAL PLAN

No.	Description of Revisions	Date	Name

Date: MARCH 15, 2016
Job Number: 15.0511
Design By: A. MAXWELL
Drawn By: E. BERNAL
Checked By: A. MAXWELL

Sheet Number:
2 of 5

Job Number: Sheet Number: 1

Location: G:\HAYNES\15.0511-44th & Vance Traffic Signal Modification\PLANS\
Drawn By: E. BERNAL
Project Manager: A. MAXWELL
Designed By: A. MAXWELL
X References:
Plot Date: 05/14/12 CAM
Tab Name: 2-Wiring
Profile View(s):
Model Space Plan view(s): PLAN
Other View:
CAD INFORMATION
Paper Space Plot view: PLOT
Dwg. Name: 02_ConduitPlan.dwg

CONSTRUCTION NOTES

1. PROVIDE AND INSTALL 2' WIDE WHITE STOP BAR.
2. PROVIDE AND INSTALL WHITE CROSSWALK STRIPING 2' X 10' TO BE PLACED OUTSIDE WHEEL PATHS.
3. PROVIDE AND INSTALL WHITE 8" SOLID STRIPE, AS SHOWN.
4. PROVIDE AND INSTALL WHITE ARROW, AS SHOWN.
5. PROVIDE AND INSTALL 4" DOUBLE YELLOW STRIPING.
6. PROVIDE AND INSTALL 4" WHITE LANE LINE STRIPING (10' STRIPE, 30' GAP).
7. PROVIDE AND INSTALL TYPE R3-7 SIGN (30x30), "RIGHT LANE MUST TURN RIGHT," WITH UNISTRUT POST PER CITY OF WHEAT RIDGE STANDARD SPECIFICATIONS.
8. PROVIDE AND INSTALL WHITE "ONLY" MARKING, AS SHOWN.
9. PROVIDE AND INSTALL WHITE THRU/RIGHT TURN ARROW, AS SHOWN.

SIGNING AND STRIPING GENERAL NOTES:

1. CROSSWALK MARKINGS TO BE PLACED OUTSIDE WHEEL PATHS.
2. CROSSWALK SHALL BE ALIGNED WITH PEDESTRIAN RAMPS.
3. PAVEMENT MARKING MATERIAL ON ASPHALT SHALL BE 3M-380 (WHITE) AND 3M-381 (YELLOW).
4. PAVEMENT MARKING MATERIAL ON CONCRETE SHALL BE 380 I-5 (WHITE) AND 3M-381 I-5 (YELLOW). PAVEMENT ADHESIVE FOR CONCRETE SHALL BE 3M-P50.
5. LANE DIMENSIONS ARE MEASURED FROM LIP OF GUTTER.
6. CROSSWALK, STOP LINE, SYMBOLS AND LEGENDS "ONLY" MATERIAL SHALL BE 3M-420 ON BOTH ASPHALT AND CONCRETE PAVEMENT.
7. ALL PAVEMENT MARKING REMOVALS SHALL BE BY GRINDING, SANDBLASTING OR CHEMICAL METHODS PROVIDED THAT THE PAVEMENT SURFACE SHALL NOT BE MATERIALLY DAMAGED. THE PAVEMENT MARKINGS SHALL BE REMOVED TO THE EXTENT THAT THEY SHALL NOT BE VISIBLE UNDER DAY OR NIGHT CONDITIONS. BLACK OUT PAINT MAY ONLY BE USED WHEN APPROVED BY THE CITY OF WHEAT RIDGE FOR SHORT TERMS, USUALLY LESS THAN 2 WEEKS.
8. NORTHBOUND VANCE STREET PAVEMENT MARKINGS ARE EXISTING. SEE CONSTRUCTION NOTES THIS SHEET FOR PROPOSED PAVEMENT MARKING INFORMATION.

NOTES:

1. LUMINAIRE MAST ARMS ARE SHOWN SKEWED FOR PLAN CLARITY. ACTUAL LUMINAIRE MAST ARM SHALL MATCH MAST ARM ORIENTATION.
2. THERMAL IMAGE VEHICLE DETECTORS SHALL BE MOUNTED ON SIGNAL HEAD MAST ARMS.

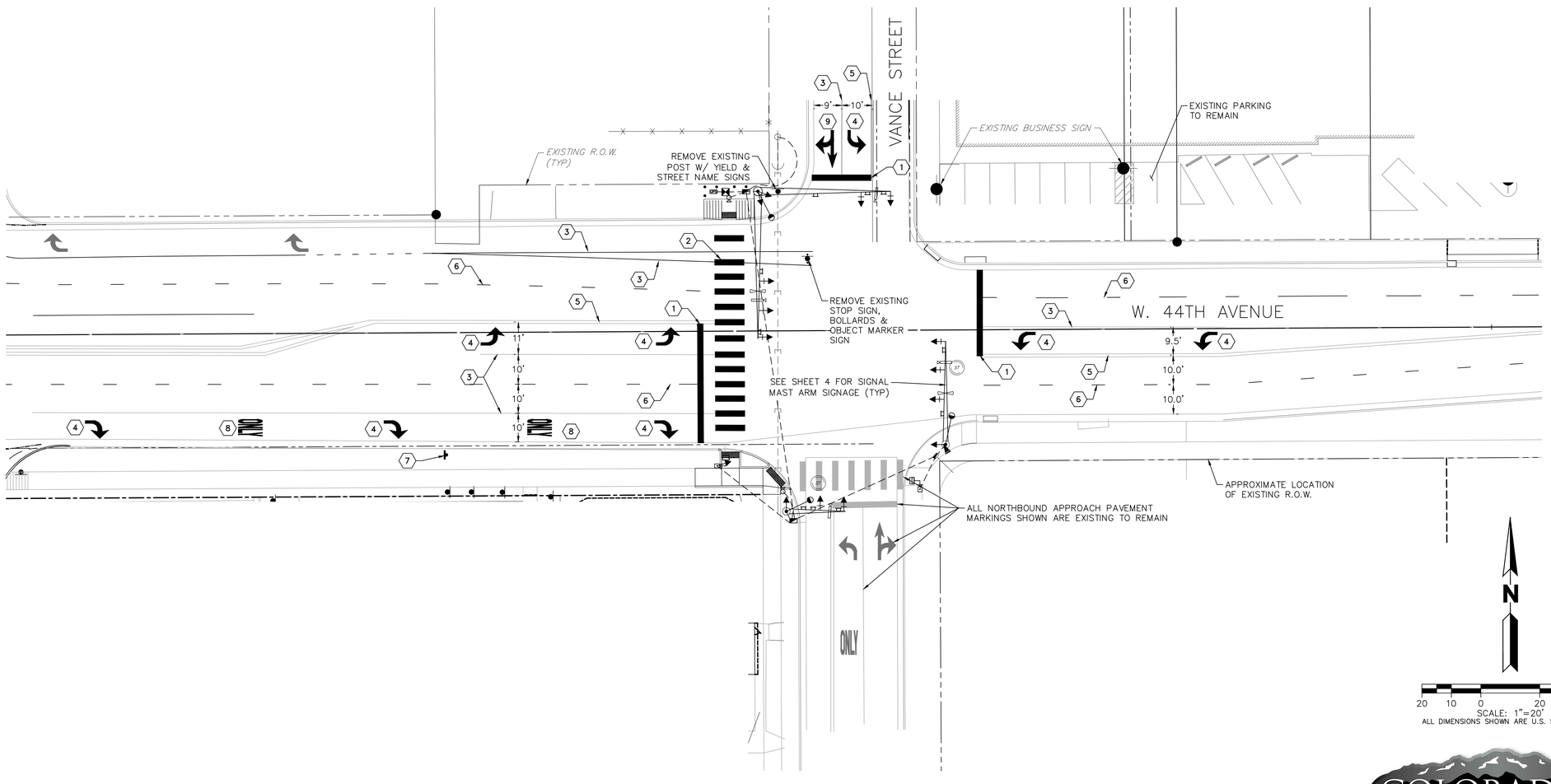

N

20 10 0 20 40
SCALE: 1"=20'
ALL DIMENSIONS SHOWN ARE U.S. SURVEY FEET

COLORADO 811
KNOW WHAT'S BELOW. CALL BEFORE YOU DIG.

CALL 811 2-BUSINESS DAYS IN ADVANCE BEFORE YOU DIG, GRADE OR EXCAVATE FOR MARKING OF UNDERGROUND MEMBER UTILITIES

MARTIN/MARTIN ASSUMES NO RESPONSIBILITY FOR UTILITY LOCATIONS. THE UTILITIES SHOWN ON THIS DRAWING HAVE BEEN PLOTTED FROM THE BEST AVAILABLE INFORMATION. IT IS, HOWEVER, THE CONTRACTORS RESPONSIBILITY TO FIELD VERIFY THE SIZE, MATERIAL, HORIZONTAL AND VERTICAL LOCATION OF ALL UTILITIES PRIOR TO THE COMMENCEMENT OF ANY CONSTRUCTION.

MARTIN / MARTIN
CONSULTING ENGINEERS
12499 WEST COLFAX AVE.
P.O. BOX 1150
LAKEWOOD, CO 80215
303.431.6100
FAX 303.431.4028

COLORADO REGISTERED PROFESSIONAL ENGINEER
RONALD G. NIESS
6/24/16
30594

44TH & VANCE SIGNAL

STRIPING PLAN

No.	Description of Revisions	Date	Name

Date: MARCH 15, 2016
Job Number: 15.0511
Design By: A. MAXWELL
Drawn By: E. BERNAL
Checked By: A. MAXWELL

Sheet Number:

Job Number: 15.0511 Sheet Number: 1

Location: G:\HAYNES\15.0511-44th & Vance Traffic Signal Modification\PLANS\
Drawn By: E. BERNAL
Project Manager: A. MAXWELL
Designed By: A. MAXWELL
X References:
Plot Date: 05/14/12 CAM
Tab Name: 3-Signage and Striping
Profile View(s):
Model Space Plan view(s): PLAN
Other View:
CAD INFORMATION
Paper Space Plot view: PLOT
Dwg. Name: 03_StripingPlan.dwg

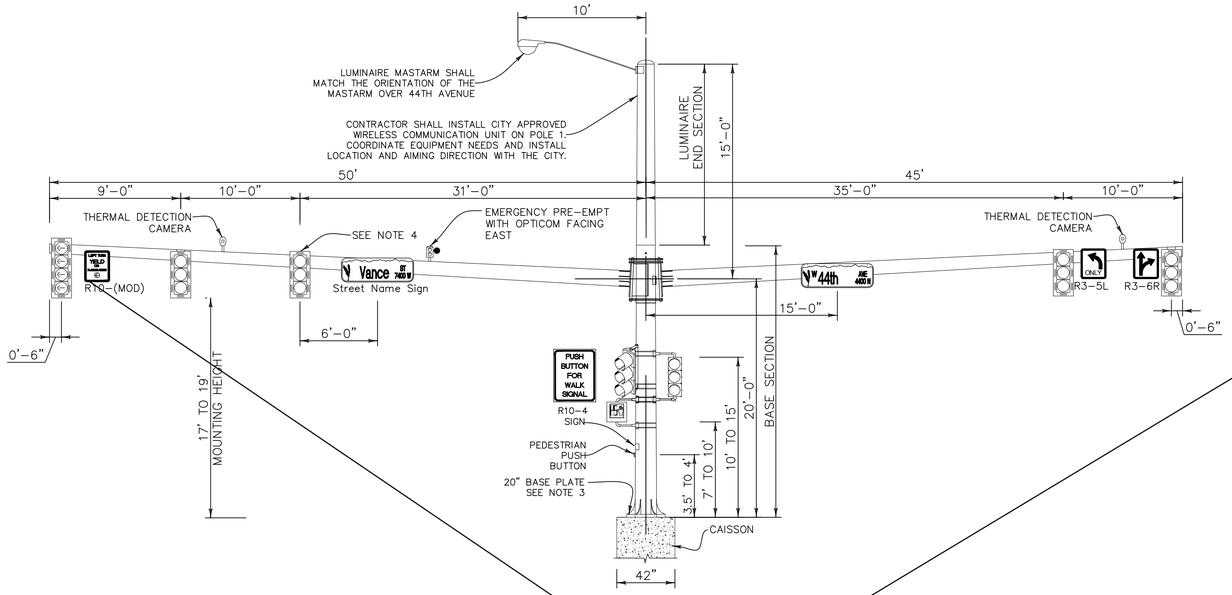

POLE 1 ELEVATION – LOOKING WEST
NOT TO SCALE

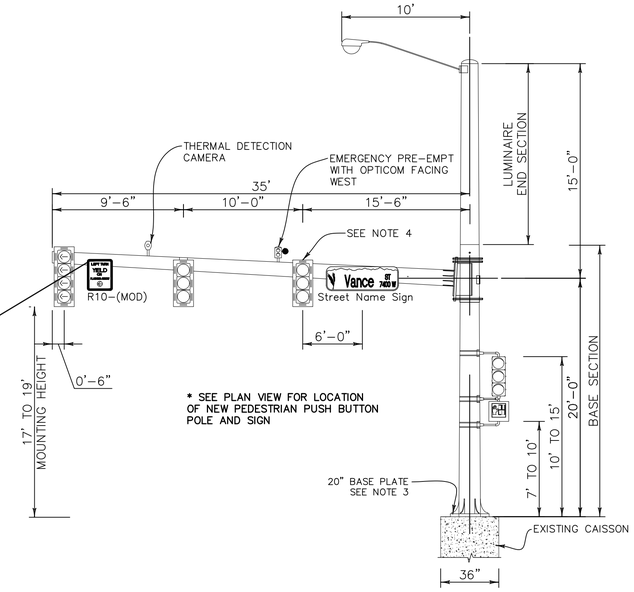

POLE 2 ELEVATION – LOOKING EAST
NOT TO SCALE

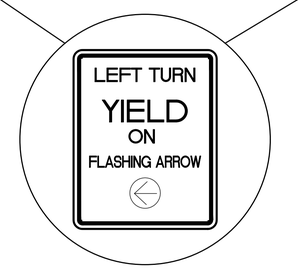

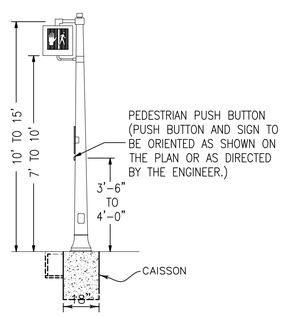

POLE 3 PEDESTAL POLE INSTALLATION – LOOKING EAST
NOT TO SCALE

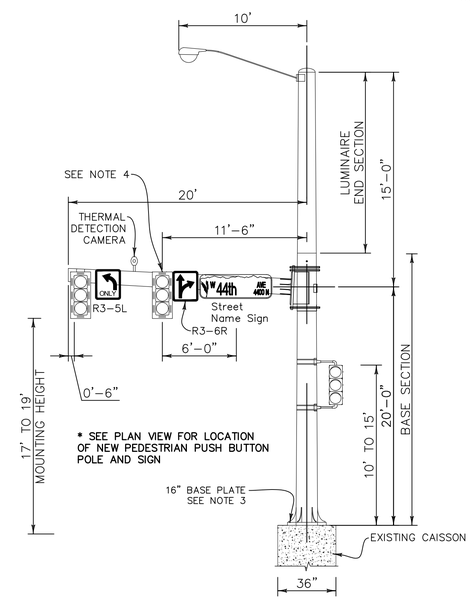

POLE 4 ELEVATION – LOOKING SOUTH
NOT TO SCALE

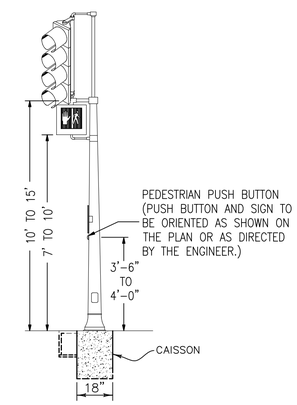

POLE 5 PEDESTAL POLE INSTALLATION – LOOKING SOUTH
NOT TO SCALE

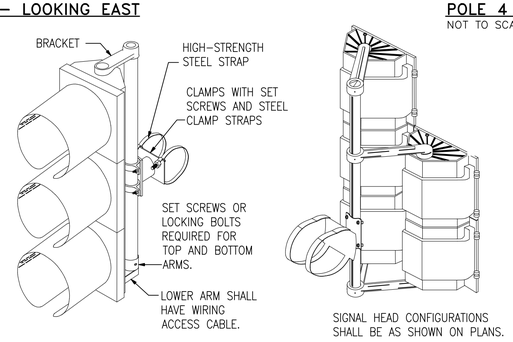

ASTRO-TYPE MOUNTING BRACKET
NOT TO SCALE

NOTES:

1. POLE AND MASTARM SHOWN ARE FOR ILLUSTRATION PURPOSES ONLY. CONTRACTOR TO PROVIDE MANUFACTURER SHOP DRAWINGS OF POLE AND MASTARM TO CITY OF WHEAT RIDGE FOR APPROVAL. SEE GENERAL NOTES ON SHEET 1 OF 6.
2. THERMAL DETECTION CAMERAS SHALL BE MOUNTED ON SIGNAL HEAD MASTARMS. LOCATIONS SHOWN ON THIS SHEET ARE FOR REFERENCE ONLY. ACTUAL INSTALLATION LOCATION ON SIGNAL HEAD MASTARM SHALL BE APPROVED BY CITY DURING CONSTRUCTION. A COMPLETE THERMAL DETECTION SYSTEM IS REQUIRED. SEE CITY OF WHEAT RIDGE STANDARD SPECIFICATION 614.08(s).
3. ALL NEW SIGNAL POLE BASE PLATE BOLT CIRCLES SHALL MATCH CITY OF WHEAT RIDGE STANDARDS. CONTRACTOR SHALL MEASURE EXISTING BASE PLATE BOLT CIRCLES (POLES 2 AND 4) PRIOR TO FABRICATION. SEE SIGNAL ELEVATIONS AND DETAILS, SHEET 5 OF 5 AND GENERAL NOTES FOR MORE INFORMATION.
4. NEW TRAFFIC SIGNAL HEADS INSTALLED ON MAST ARMS SHALL BE CENTERED APPROXIMATELY IN THE MIDDLE OF THE APPROACH LANE. DIMENSIONS SHOWN ON THIS SHEET ARE APPROXIMATE.
5. HAND HOLES SHALL BE SUPPLIED AT THE POLE BASE AND ACROSS FROM THE MASTARM FITTING.

MARTIN / MARTIN
CONSULTING ENGINEERS
12499 West Colfax Ave.
P.O. Box 1550
Lakewood, CO 80215
303.431.6100
FAX 303.431.4028

COLORADO REGISTERED PROFESSIONAL ENGINEER
RONALD G. HIGGS
6/24/16
30594

44TH & VANCE SIGNAL

SIGNAL ELEVATIONS & DETAILS

No.	Description of Revisions	Date	Name

Date: MARCH 15, 2016
Job Number: 15.0511
Design By: A. MAXWELL
Drawn By: E. BERNAL
Checked By: A. MAXWELL

Sheet Number:
4 of 5

Job Number: 15.0511 Sheet Number: 1

Location: G:\HAYNES\15.0511-44th & Vance Traffic Signal Modification\PLANS\
Drawn By: E. BERNAL
Project Manager: A. MAXWELL
Designed By: A. MAXWELL
X References:
Plot Date: 05/14/12 CAM
Tab Name: 4-Elevations
Profile View(s):
Model Space Plan view(s): PLAN
Other View:
CAD INFORMATION Paper Space Plot view: PLOT
Dwg. Name: 04_Elevations.dwg

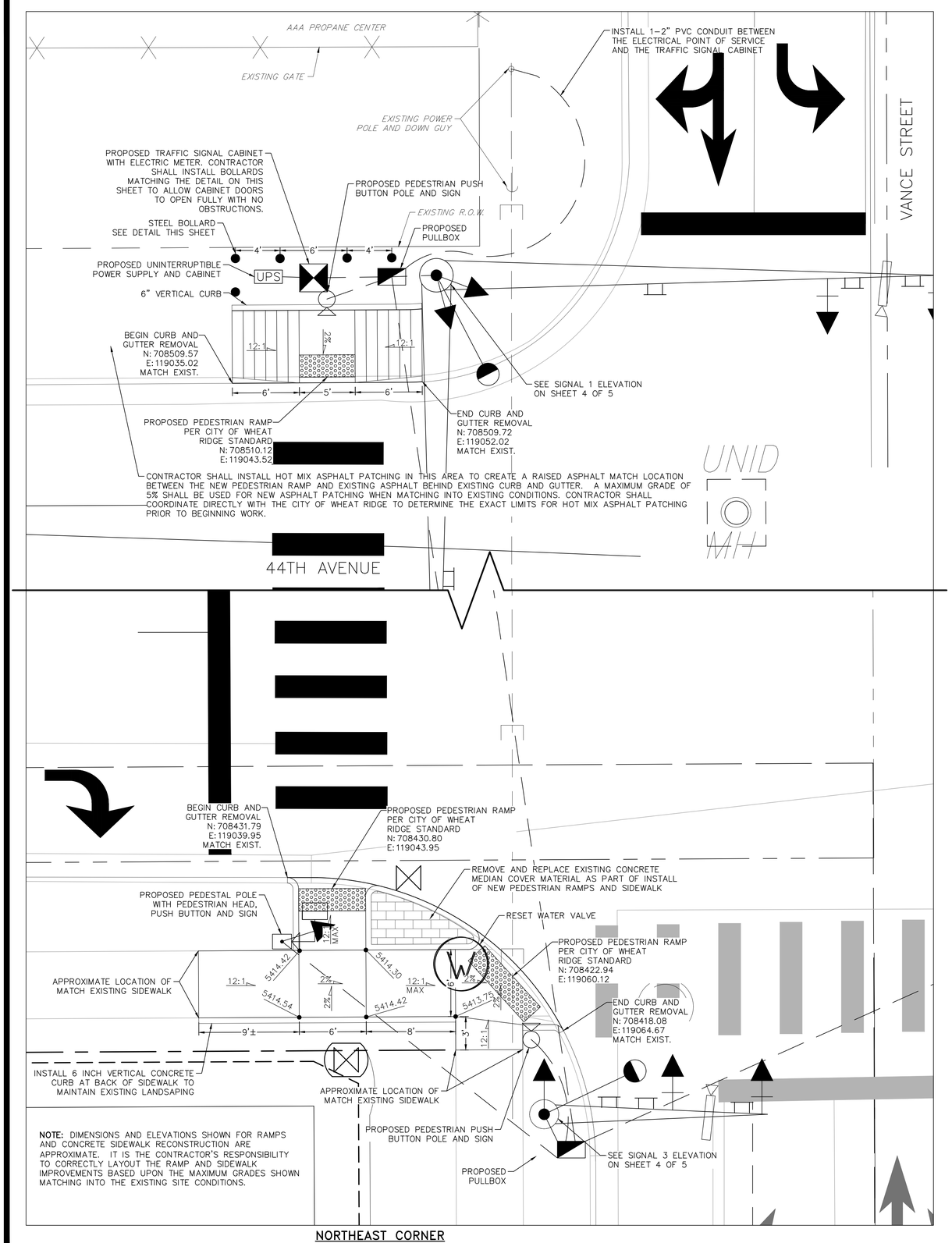

NOTE: DIMENSIONS AND ELEVATIONS SHOWN FOR RAMPS AND CONCRETE SIDEWALK RECONSTRUCTION ARE APPROXIMATE. IT IS THE CONTRACTOR'S RESPONSIBILITY TO CORRECTLY LAYOUT THE RAMP AND SIDEWALK IMPROVEMENTS BASED UPON THE MAXIMUM GRADES SHOWN MATCHING INTO THE EXISTING SITE CONDITIONS.

NORTHEAST CORNER

SCALE: 1"=5'

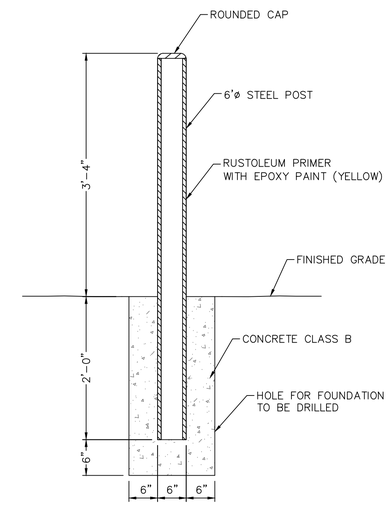

STEEL BOLLARD

NOT TO SCALE

NOTE 1: SEE GENERAL NOTES ON SHEET 1 FOR POLE CRITERIA PRIOR TO ORDERING TRAFFIC SIGNAL POLES. POLE BASE BOLT PATTERN SHALL MATCH CITY OF WHEAT RIDGE STANDARDS. 16.5" OR 20" POLES WITH MAST ARM LESS THAN OR EQUAL TO 35 FEET LONG SHALL HAVE 16½ INCH DIAMETER BOLT CIRCLE. POLES WITH ARM GREATER THAN 35 FEET LONG SHALL HAVE 20 INCH DIAMETER BOLT CIRCLE. CONTRACTOR TO MEASURE BOLT PATTERN OF EXISTING CAISSONS PRIOR TO FABRICATION.

SOCKET WELD DATA

	ARM LENGTH (FT.)	W_1 (IN.)	W_2 (IN.)	E (IN.)	θ (DEG.)
MAST ARMS	25	0.2391	0.285	0.183	40
	35	0.2391	0.285	0.183	40
	45	0.3125	0.372	0.239	40
	55	0.3125	0.372	0.239	40
POLE	ALL	0.3125	0.372	0.239	40
LUMINAIRE ARMS	ALL	0.1793	0.214	0.138	40

BACKING RING WELD DATA

	ARM LENGTH (FT.)	W_1 (IN.)	W_2 (IN.)	E (IN.)	θ (DEG.)
MAST ARMS	25	0.1196	0.489	0.289	14
	35	0.1196	0.489	0.289	14
	45	0.1566	0.563	0.385	16
	55	0.1566	0.563	0.385	16
POLE	ALL	0.1566	0.563	0.385	16
LUMINAIRE ARMS	ALL	0.0897	0.429	0.212	12

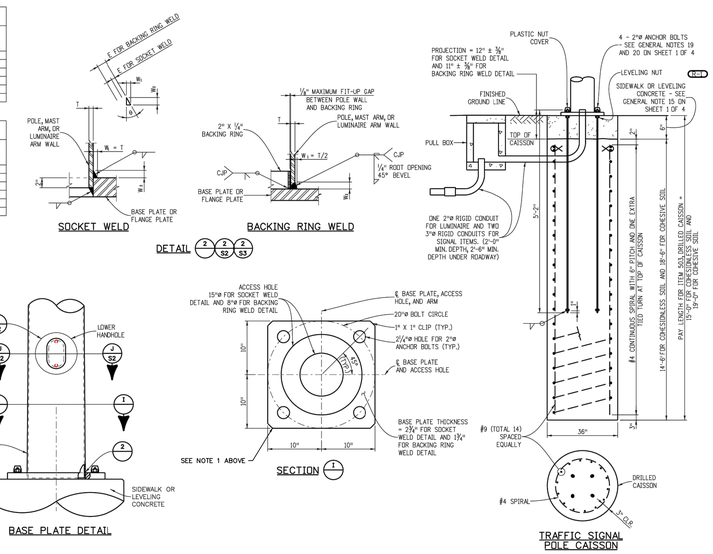

Computer File Information		
Creation Date: 07-04-12	Initials: LAW	
Last Modification Date: 09-25-12	Initials: LAW	LAW
Full Path: www.coloradodot.info/business/designsupport		LAW
Drawing File Name: Sheet_S-614-40A_4of5.dgn		LAW
CAD Ver.: MicroStation V8 Scale: Not to Scale Units: English		LAW

Sheet Revisions		
	Date:	Comments
LAW	9-25-12	Correct sheet references
LAW		
LAW		
LAW		

Colorado Department of Transportation
4201 East Arkansas Avenue
Denver, Colorado 80222
Phone: (303) 757-9543
Fax: (303) 757-9219
Safety & Traffic Engineering Branch KCM/RLG

ALTERNATE TRAFFIC SIGNAL INSTALLATION DETAILS

Issued By: Safety & Traffic Engineering Branch July 4, 2012

STANDARD PLAN NO. S-614-40A

Sheet No. 4 of 4

MARTIN / MARTIN
CONSULTING ENGINEERS
12499 West Colfax Ave.
Building B-250
Lakewood, Colorado 80215
303.431.6100
FAX 303.431.4028

COLORADO REGISTERED PROFESSIONAL ENGINEER RONALD G. YHIO 30594 6/24/16

44TH & VANCE SIGNAL

SIGNAL ELEVATIONS & DETAILS

No.	Description of Revisions	Date	Name

Date: MARCH 15, 2016
Job Number: 15.0511
Design By: A. MAXWELL
Drawn By: E. BERNAL
Checked By: A. MAXWELL

Sheet Number: 5 of 5

Job Number: Sheet Number: 1

Location: G:\HAYNES\15.0511-44th & Vance Traffic Signal Modification\PLANS\
Drawn By: E. BERNAL
Project Manager: A. MAXWELL
Designed By: A. MAXWELL
X References:
Plot Date: 05/14/12 CAM
Tab Name: 5-Elevations
Profile View(s):
Model Space
Plan view(s): PLAN
Other View:
CAD INFORMATION
Paper Space
Plot view: PLOT
Dwg. Name: 04_Elevations.dwg